Australia Telescope Compact Array

Schedule:- 30 Mar - 12 Apr

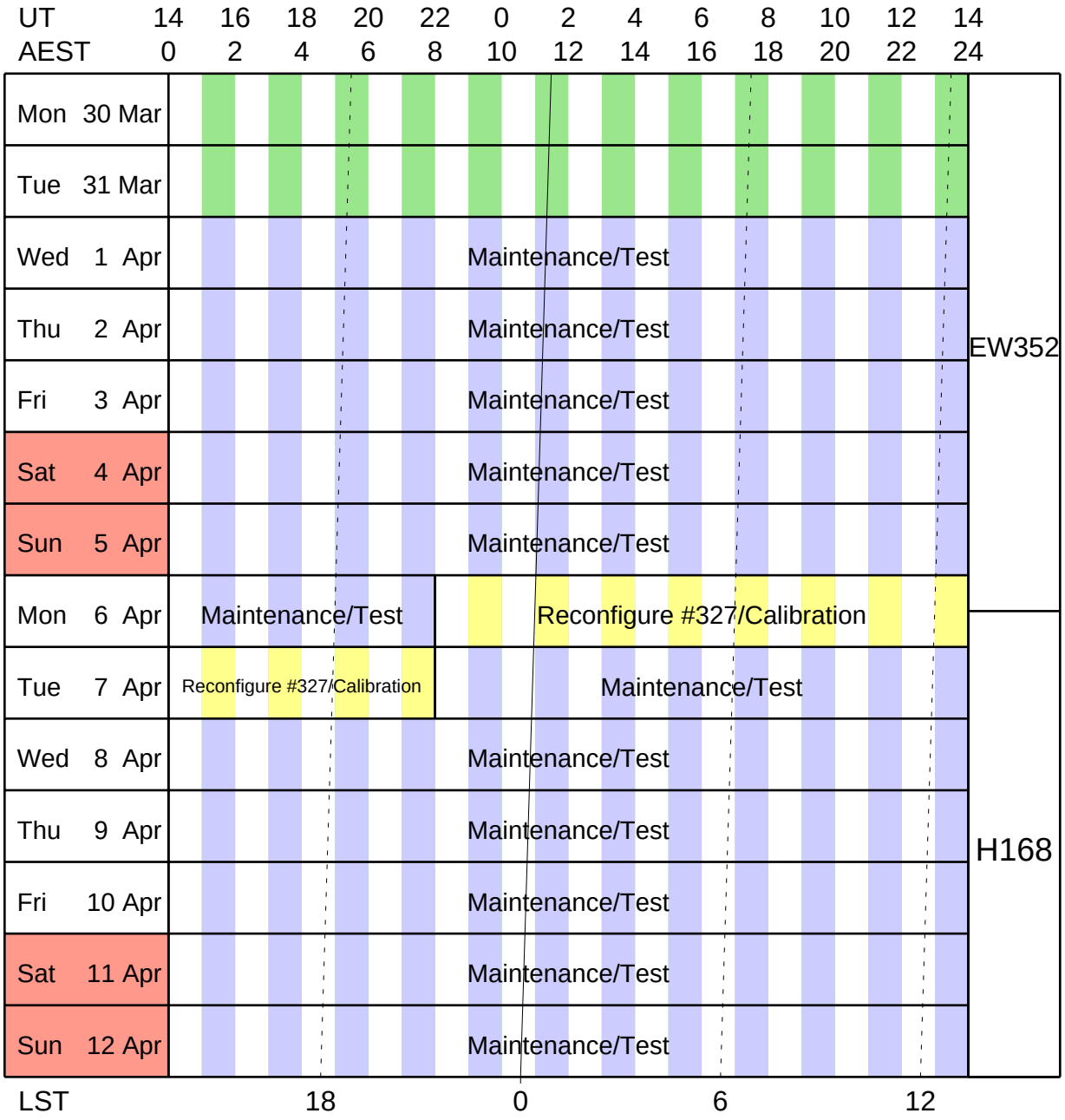

	Stations	Baselines (m)
EW352	W102 W104 W109 W112 W125 W392	31,46,77,107,122,153,199,245,321,352,4087,4286,4332,4408,4438
H168	W100 N11 N7 W104 W111 W392	61,61,107,111,132,141,168,171,185,192,4301,4379,4381,4408,4469

Australia Telescope Compact Array

Schedule:- 13 Apr - 26 Apr

UT	14	16	18	20	22	0	2	4	6	8	10	12	14
AEST	0	2	4	6	8	10	12	14	16	18	20	22	24

Mon	13 Apr	Maintenance/Test	H168
Tue	14 Apr	Maintenance/Test	
Wed	15 Apr	Maintenance/Test	
Thu	16 Apr	Maintenance/Test	
Fri	17 Apr	Maintenance/Test	
Sat	18 Apr	Maintenance/Test	
Sun	19 Apr	Maintenance/Test	
Mon	20 Apr	Maintenance/Test	
Tue	21 Apr	Maintenance/Test	
Wed	22 Apr	Maintenance/Test; many C007(Edwards) (3mm, 7mm, 1cm) (CABB)	
Thu	23 Apr	many C007(Edwards) (3mm, 7mm, 1cm) (CABB); Maintenance/Test; mmCalibrators C2050(Newton-Mcgee) (3&7mm) (CABB)	
Fri	24 Apr	mmCalibrators C2050(Newton-Mcgee) (3&7mm) (CABB); Fermi AGN C1730(Tingay) (3+6cm&12mm&7mm) (CABB)	
Sat	25 Apr	Fermi AGN C1730(Tingay) (3+6cm&12mm&7mm) (CABB); 1E 0657-56 C2037(Subrahmanyan) (1cm) (CABB); C1803	
Sun	26 Apr	BAT AGN C1803(Tingay) (7mm) (128); 1E 0657-56 C2037(Subrahmanyan) (1cm) (CABB)	

LST 18 0 6 12

Stations	Baselines (m)
H168 W100 N11 N7 W104 W111 W392	61,61,107,111,132,141,168,171,185,192,4301,4379,4381,4408,4469

Australia Telescope Compact Array

Schedule:- 27 Apr - 10 May

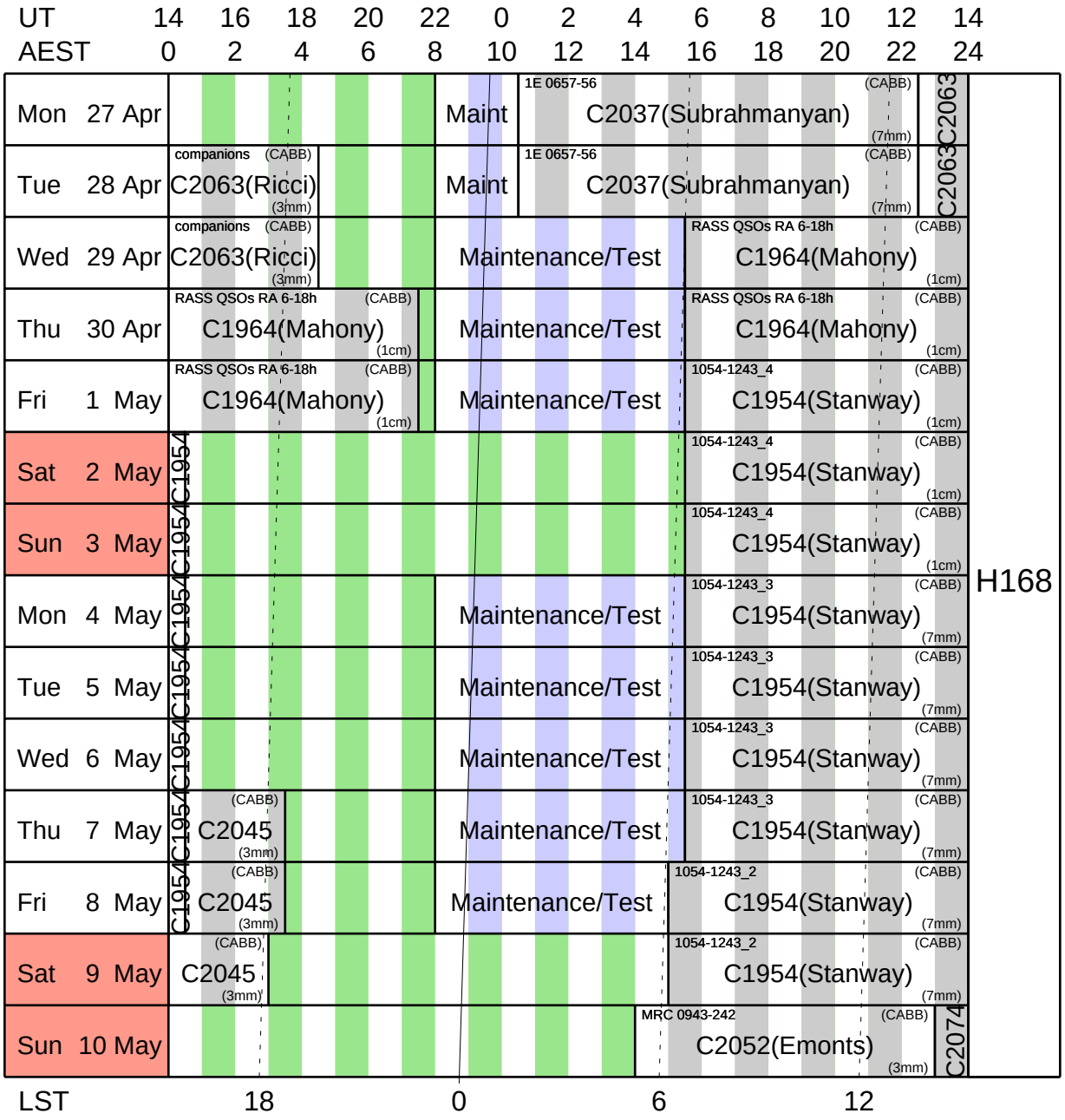

Stations	Baselines (m)
H168 W100 N11 N7 W104 W111 W392	61,61,107,111,132,141,168,171,185,192,4301,4379,4381,4408,4469

Australia Telescope Compact Array

Schedule:- 11 May - 24 May

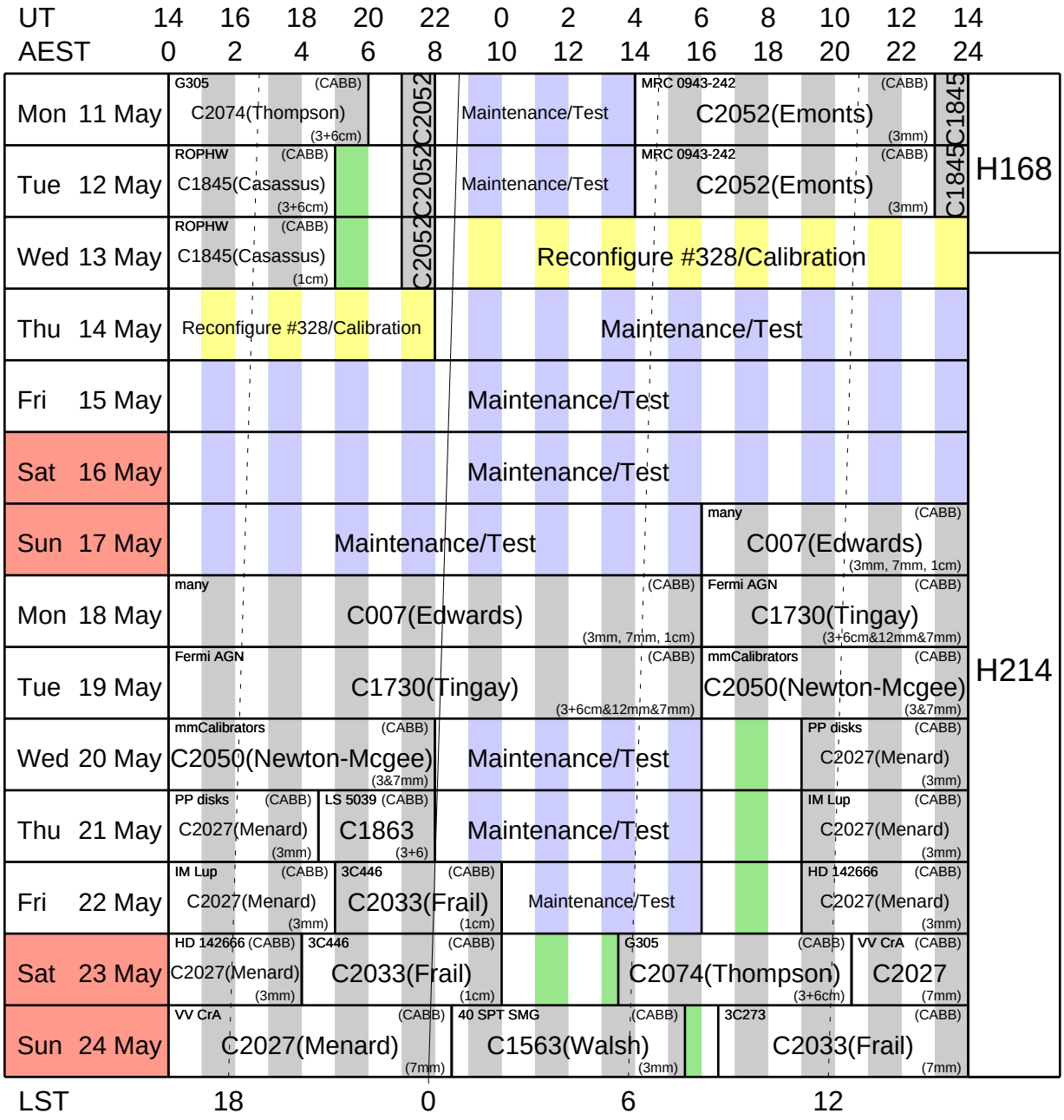

	Stations	Baselines (m)
H168	W100 N11 N7 W104 W111 W392	61,61,107,111,132,141,168,171,185,192,4301,4379,4381,4408,4469
H214	W98 N5 N14 W104 W113 W392	82,92,132,138,138,144,216,230,240,247,4270,4378,4383,4408,4500

Australia Telescope Compact Array

Schedule:- 25 May - 7 Jun

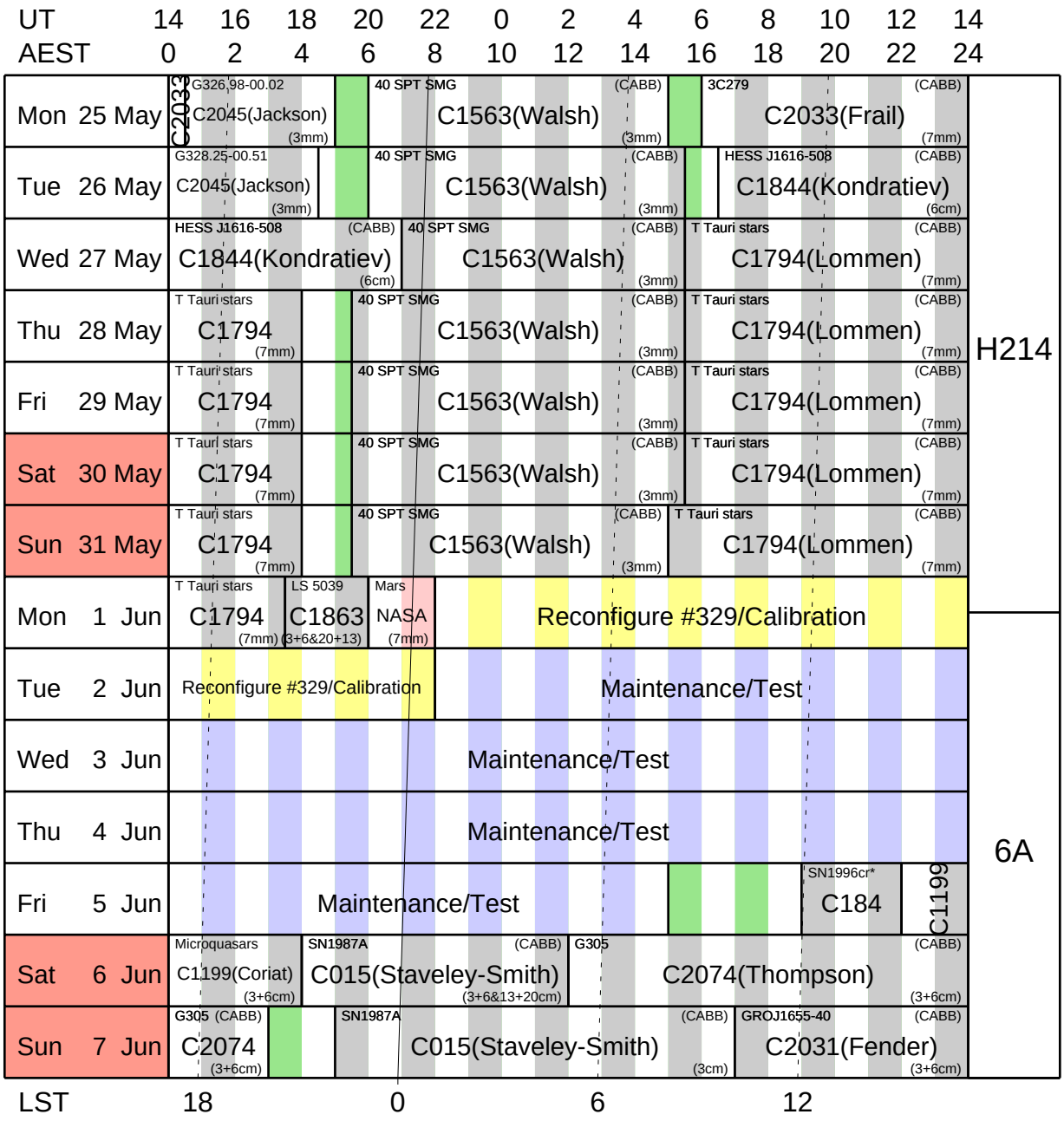

	Stations	Baselines (m)
H214	W98 N5 N14 W104 W113 W392	82,92,132,138,138,144,216,230,240,247,4270,4378,4383,4408,4500
6A	W4 W45 W102 W173 W195 W392	337,628,872,1087,1432,1500,1959,2296,2587,2923,3015,3352,4439,5311,5939

Australia Telescope Compact Array

Schedule:- 8 Jun - 21 Jun

UT	14	16	18	20	22	0	2	4	6	8	10	12	14
AEST	0	2	4	6	8	10	12	14	16	18	20	22	24

Mon	8 Jun	GROJ1655-40 (CABB) C2031(Fender) (3+6cm); eCDFS (CABB) C2028(Huynh) (3+6cm); post-AGB sample (CABB) C1450(Bains) (3+6cm)	
Tue	9 Jun	post-AGB sample C1450(Bains) (3+6cm); eCDFS (CABB) C2028(Huynh) (3+6cm); post-AGB sample (CABB) C1450(Bains) (3+6cm)	
Wed	10 Jun	post-AGB sample C1450(Bains) (3+6cm); eCDFS (CABB) C2028(Huynh) (3+6cm); post-AGB sample (CABB) C1450(Bains) (3+6cm)	
Thu	11 Jun	post-AGB sample (CABB) C1450(Bains) (3+6cm); Mars (64) NASA (7mm); Maint; FRMS1 (CABB) C2067(Broderick) (20cm); C1863	
Fri	12 Jun	C1863; LMC/SMC survey (CABB) C2049(Imai) (1cm); FRMS2 (CABB) C2067(Broderick) (20cm)	
Sat	13 Jun	FRMS2 (CABB) C2067 (20cm); LMC/SMC survey (CABB) C2049(Imai) (7mm); G315.9-0.0 (CABB) C2048(Ng) (3+6cm)	
Sun	14 Jun	G315.9-0.0 (CABB) C2048(Ng) (3+6cm); J2143-4423 (CABB) C2032(Beelen) (20cm); YY Men (CABB) C2038(Osten) (3+6cm); C2032	
Mon	15 Jun	J2143-4423 (CABB) C2032(Beelen) (20cm); YY Men (CABB) C2038(Osten) (3+6cm); C2032	6A
Tue	16 Jun	J2143-4423 (CABB) C2032(Beelen) (20cm); YY Men (CABB) C2038(Osten) (3+6cm); J2143-4423 C2032 (20cm)	
Wed	17 Jun	J2143-4423 (CABB) C2032(Beelen) (20cm); pictor a (CABB) C911(Lenc) (6cm); GJ 674 (Select) C2070(Blank) (3+6cm)	
Thu	18 Jun	GJ 674 (Select) C2070(Blank) (3+6cm); Mars (64) NASA (7mm); Maintenance/Test; G333.8 (CABB) C1977(Hoare) (6cm)	
Fri	19 Jun	G333.8 (CABB) C1977(Hoare) (6cm); ATLASeCDFS (CABB) C1967(Hopkins) (20cm); G333.8 (CABB) C1977(Hoare) (6cm)	
Sat	20 Jun	G333.8 (CABB) C1977(Hoare) (6cm); ATLASeCDFS (CABB) C1967(Hopkins) (20cm); Microquasars C1199 (3+6cm)	
Sun	21 Jun	Microquasars C1199 (3+6cm); ATLASeCDFS (CABB) C1967(Hopkins) (20cm); SN1996cr* (128) C184(Bauer) (3mm, 7mm, 1cm)	

LST 0 6 12 18

	Stations	Baselines (m)
6A	W4 W45 W102 W173 W195 W392	337,628,872,1087,1432,1500,1959,2296,2587,2923,3015,3352,4439,5311,5939

Australia Telescope Compact Array

Schedule:- 22 Jun - 5 Jul

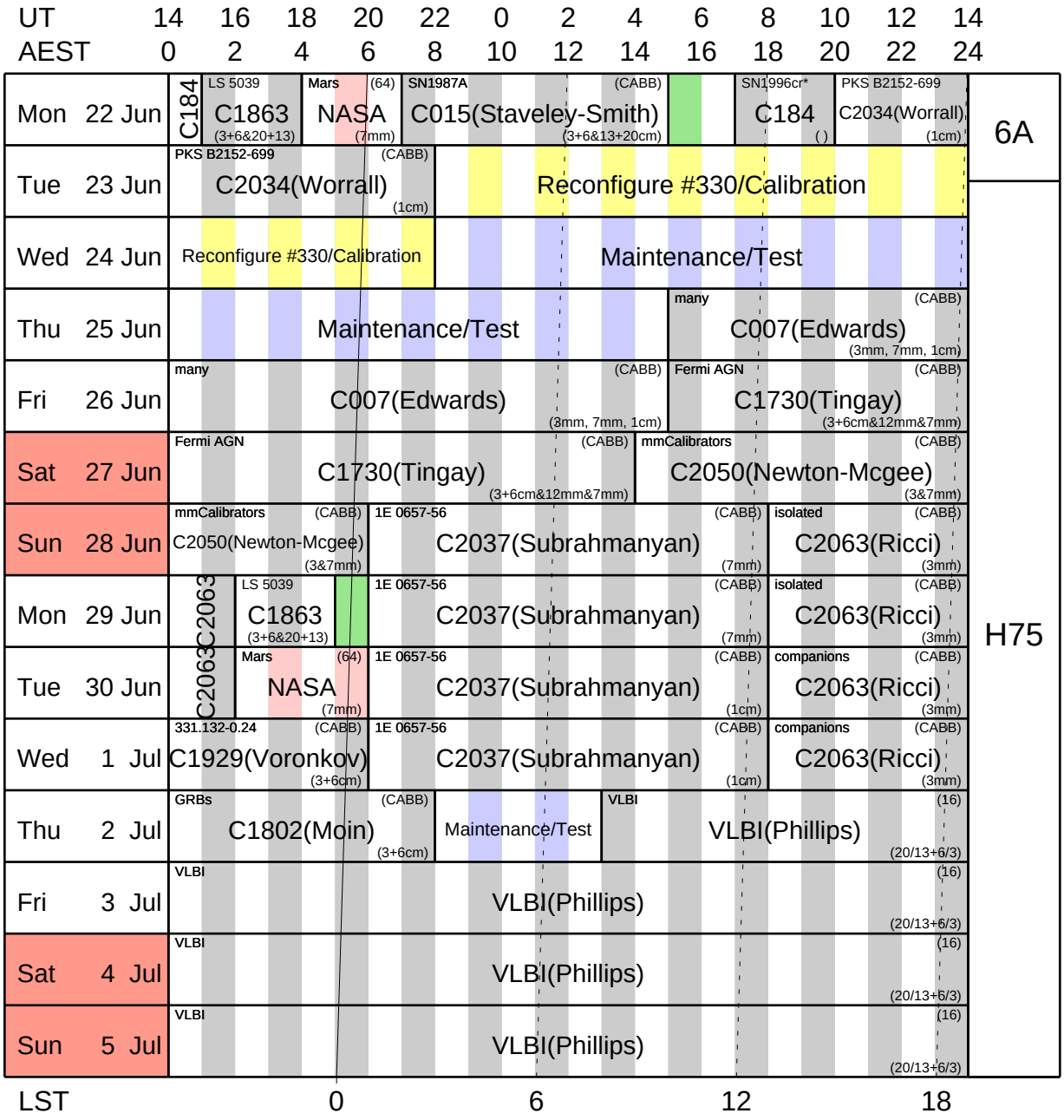

	Stations	Baselines (m)
6A	W4 W45 W102 W173 W195 W392	337,628,872,1087,1432,1500,1959,2296,2587,2923,3015,3352,4439,5311,5939
H75	W104 N2 N5 W106 W109 W392	31,31,43,46,55,77,77,82,89,4332,4378,4378,4378,4408

Australia Telescope Compact Array

Schedule:- 6 Jul - 19 Jul

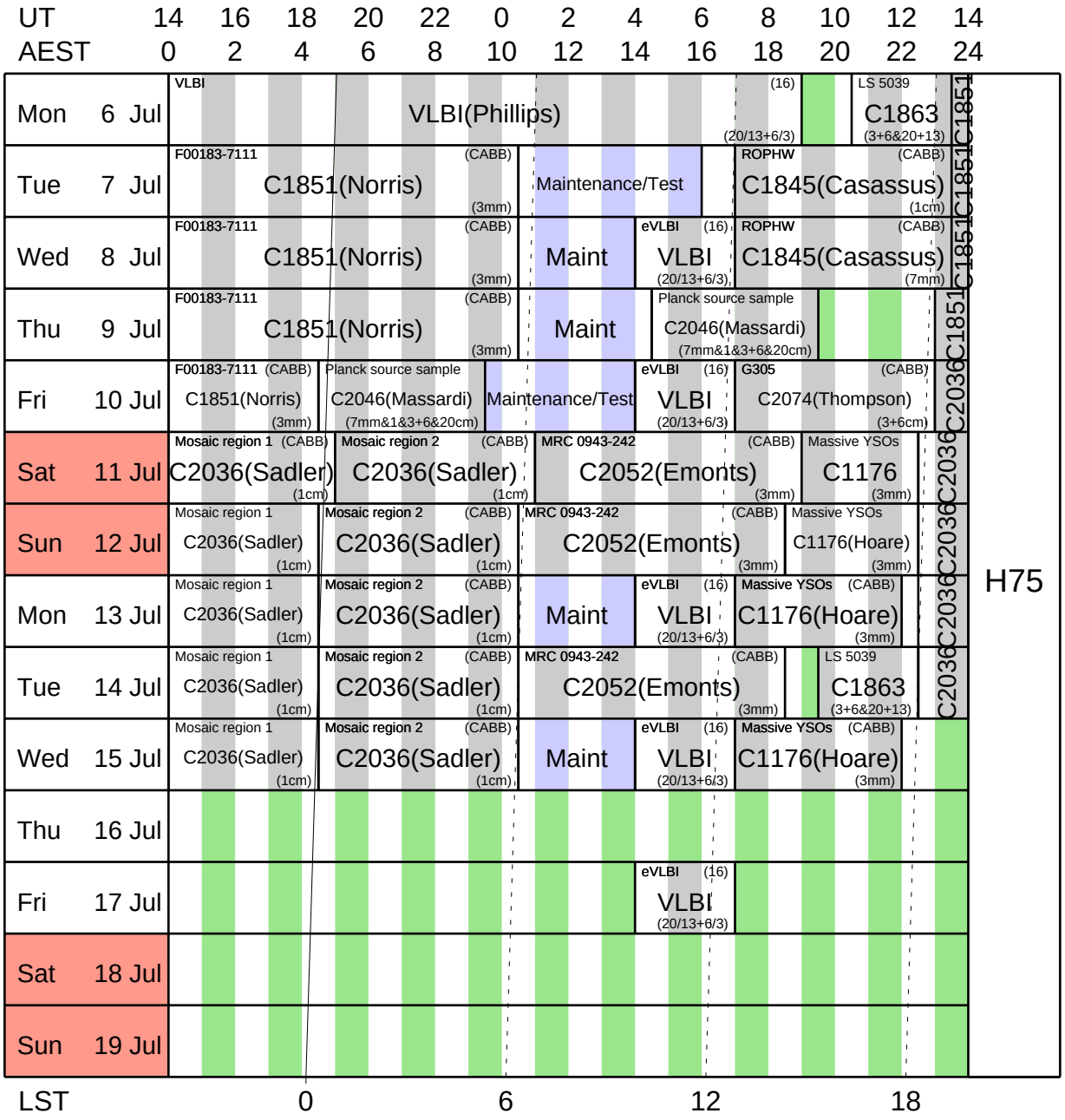

	Stations	Baselines (m)
H75	W104 N2 N5 W106 W109 W392	31,31,43,46,55,77,77,82,89,4332,4378,4378,4378,4408

Australia Telescope Compact Array

Schedule:- 20 Jul - 2 Aug

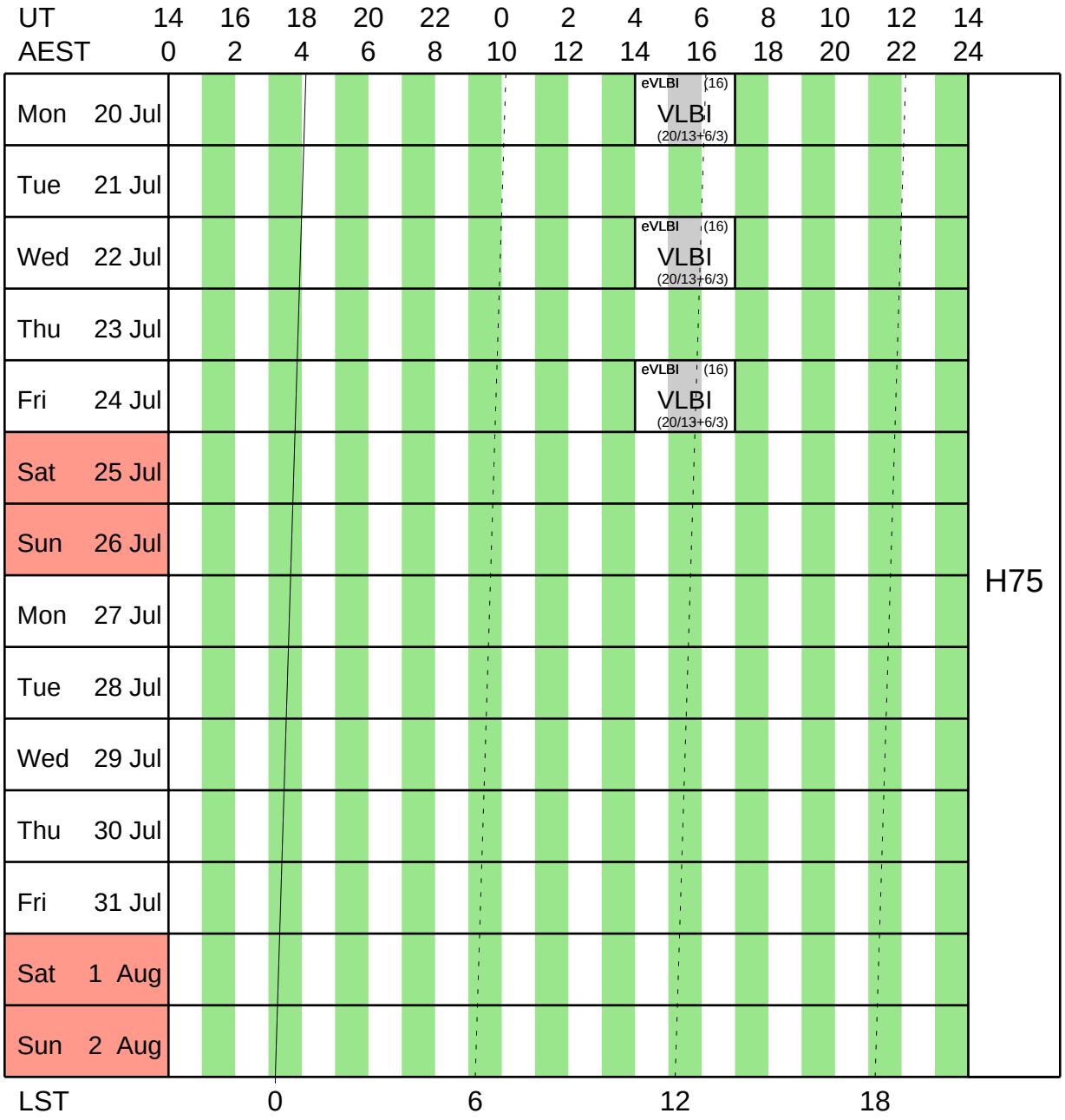

	Stations	Baselines (m)
H75	W104 N2 N5 W106 W109 W392	31,31,43,46,55,77,77,82,89,4332,4378,4378,4378,4408

Australia Telescope Compact Array

Schedule:- 3 Aug - 16 Aug

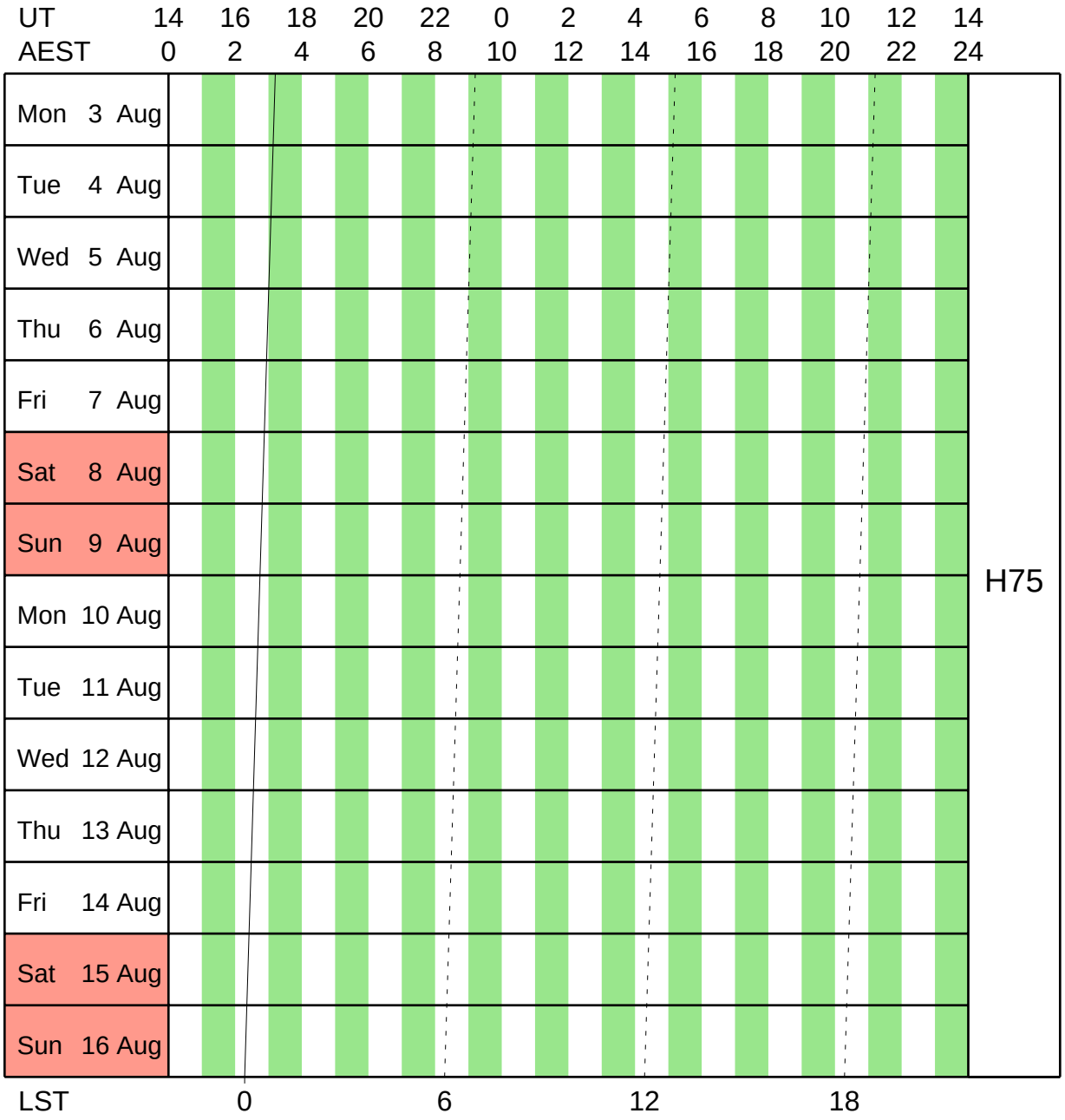

	Stations	Baselines (m)
H75	W104 N2 N5 W106 W109 W392	31,31,43,46,55,77,77,82,89,4332,4378,4378,4378,4408

Australia Telescope Compact Array

Schedule:- 17 Aug - 30 Aug

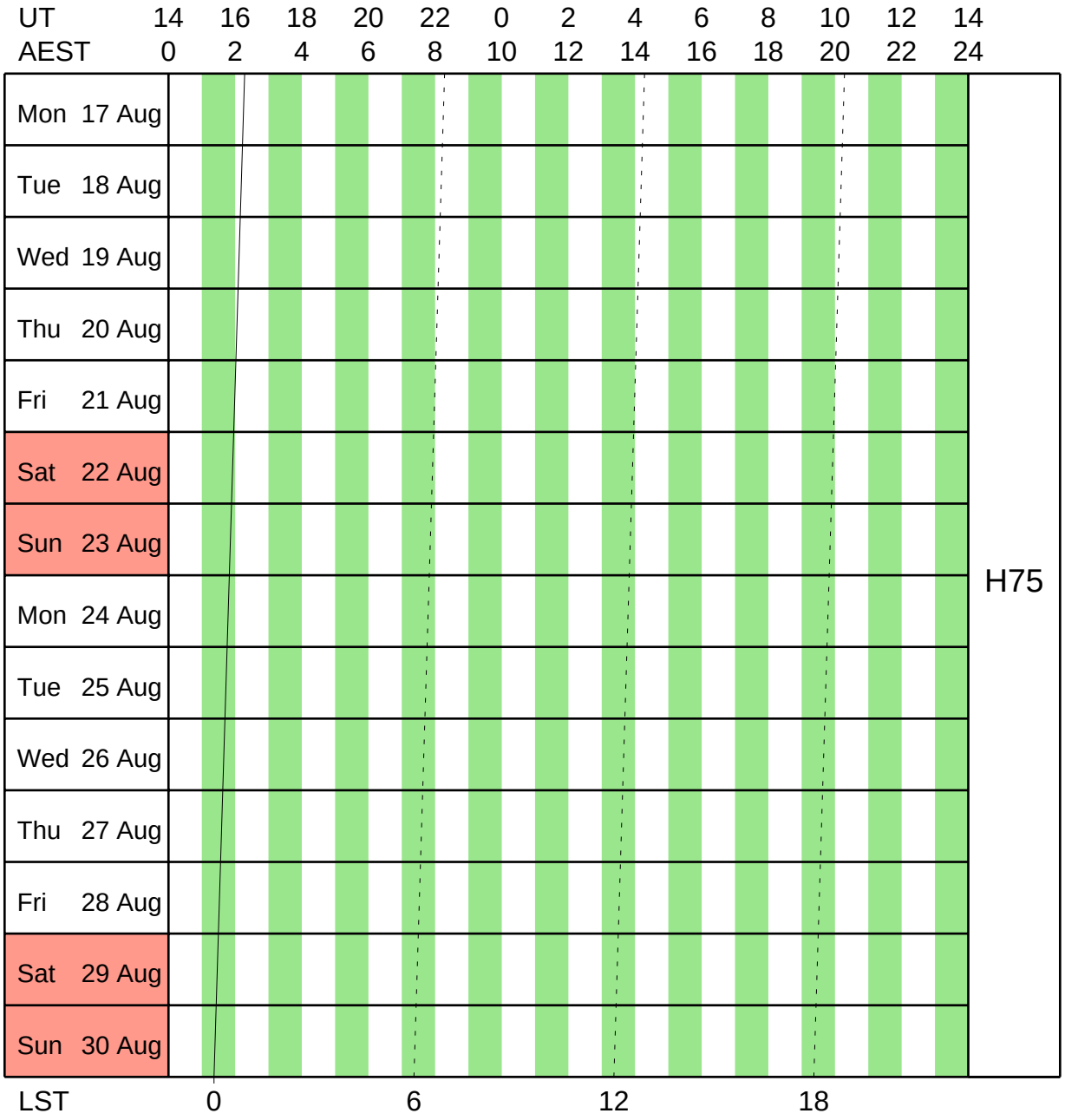

	Stations	Baselines (m)
H75	W104 N2 N5 W106 W109 W392	31,31,43,46,55,77,77,82,89,4332,4378,4378,4378,4408

Australia Telescope Compact Array

Schedule:- 31 Aug - 13 Sep

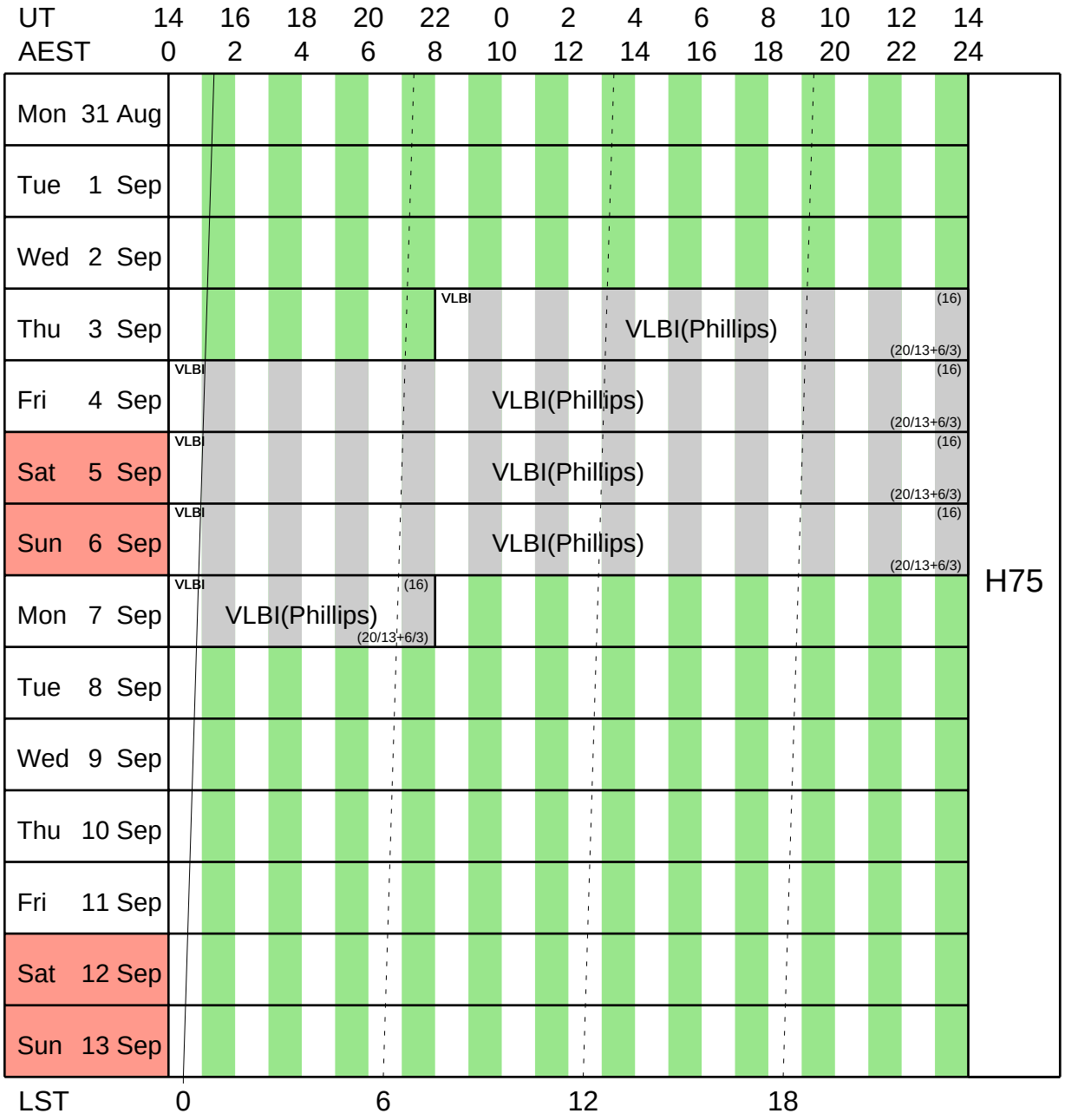

	Stations	Baselines (m)
H75	W104 N2 N5 W106 W109 W392	31,31,43,46,55,77,77,82,89,4332,4378,4378,4378,4408

Australia Telescope Compact Array

Schedule:- 14 Sep - 27 Sep

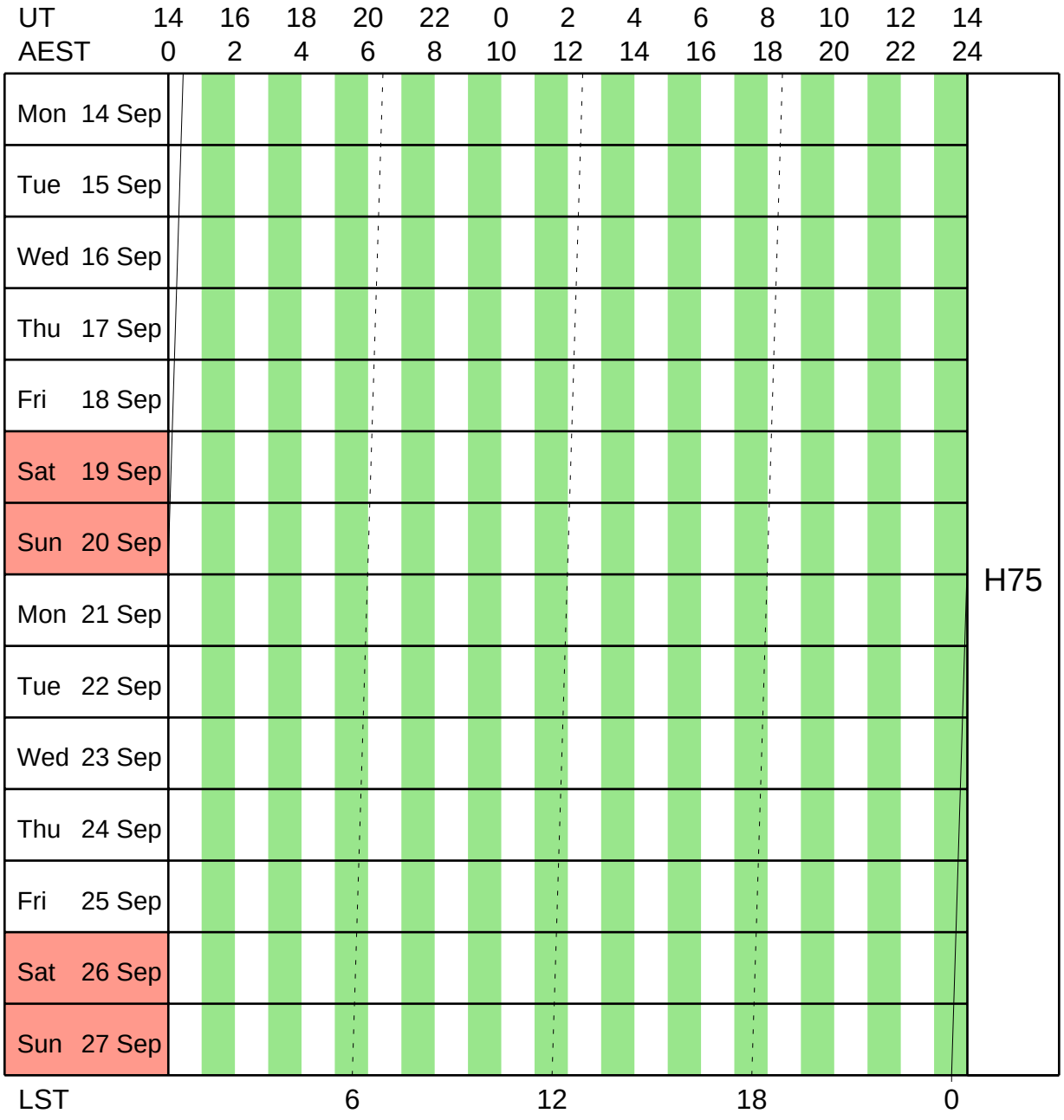

	Stations	Baselines (m)
H75	W104 N2 N5 W106 W109 W392	31,31,43,46,55,77,77,82,89,4332,4378,4378,4378,4408

Australia Telescope Compact Array

Schedule:- 28 Sep - 11 Oct

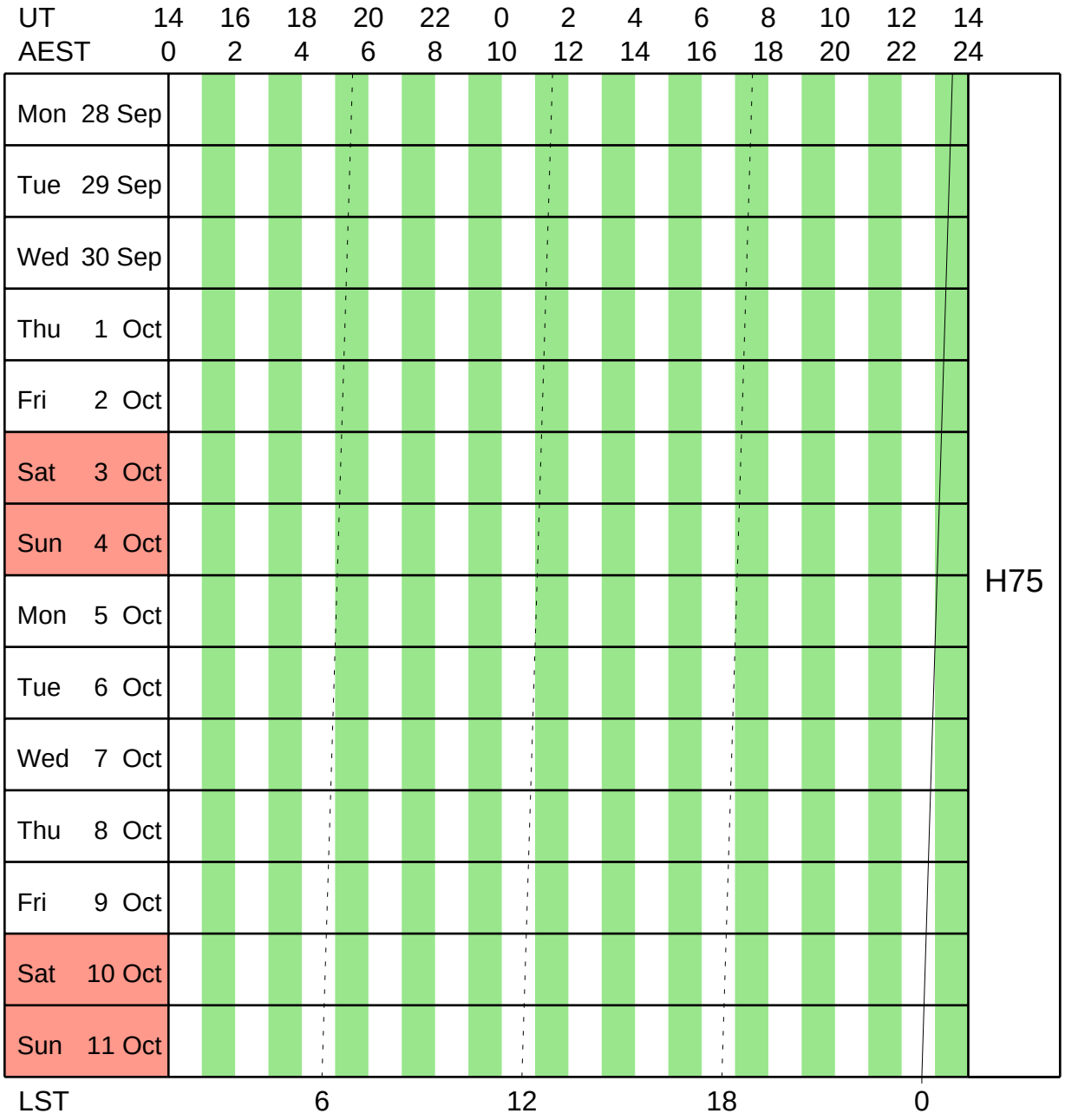

	Stations	Baselines (m)
H75	W104 N2 N5 W106 W109 W392	31,31,43,46,55,77,77,82,89,4332,4378,4378,4378,4408