Australia Telescope Compact Array

Schedule:- 30 Sep - 13 Oct

UT / AEST	14 / 0	16 / 2	18 / 4	20 / 6	22 / 8	0 / 10	2 / 12	4 / 14	6 / 16	8 / 18	10 / 20	12 / 22	14 / 24	
Mon 30 Sep												C2787		
Tue 1 Oct	C2787	MRC0156-252 (1M) C2885(Emonts) (7mm)				Maintenance/Test				MR 2251-178 (1M) C2787(Behar) (3mm)				
Wed 2 Oct	C2787	MRC0156-252 (1M) C2885(Emonts) (7mm)				Maintenance/Test						MRC0156-252 C2885(Emonts) (7mm)		
Thu 3 Oct		MRC0156-252 (1M) C2885(Emonts) (7mm)				Maintenance/Test						MRC0156-252 C2885(Emonts) (7mm)		
Fri 4 Oct		MRC0156-252 (1M) C2885(Emonts) (7mm)		ATCA Calibrators C007(Stevens) (3,7,12mm)							(1M)	MRC0156-252 C2885(Emonts) (7mm)		
Sat 5 Oct		MRC0156-252 (1M) C2885(Emonts) (7mm)		PKS 1257-326 (1M) C2745(Hodgson) (6cm 3cm)								MRC0156-252 C2885(Emonts) (7mm)		
Sun 6 Oct		MRC0156-252 (1M) C2885(Emonts) (7mm)		PKS 1257-326 (1M) C2745(Hodgson) (6cm 3cm)						SAB3037 (1M) C2905(Dunne) (3mm)				
Mon 7 Oct		SAB3037 C2905 (3mm)	AS0592-AzTEC3 (1M) C2909(Tamura) (3mm)							SAB2956 (1M) C2905(Dunne) (3mm)				H214
Tue 8 Oct		SAB2956 C2905 (3mm)	AS0592-AzTEC3 (1M) C2909(Tamura) (3mm)				Maintenance/Test			SAB5264 (1M) C2905(Dunne) (3mm)				
Wed 9 Oct	C2905		AS0592-AzTEC3 (1M) C2909(Tamura) (3mm)				Maintenance/Test			SAB7870 (1M) C2905(Dunne) (3mm)				
Thu 10 Oct	C2905		AS0592-AzTEC3 (1M) C2909(Tamura) (3mm)				Maintenance/Test		MMJ1545-34 (1M) C2910(Taniguchi) (7mm)		MRC0156-252 (1M) C2885(Emonts) (7mm)			
Fri 11 Oct		MRC0156-252 (1M) C2885(Emonts) (7mm)				Maintenance/Test		MMJ1545-34 (1M) C2910(Taniguchi) (7mm)		MM J01071-7301 (1M-0.5k) C2907(Takekoshi) (7mm)				
Sat 12 Oct		MM J01071-7301 C2907(Takekoshi) (7mm)					MMJ1545-34 (1M) C2910(Taniguchi) (7mm)			Faraday Rotation (1M) C2886(Williams) (16cm 4cm)				
Sun 13 Oct		Faraday Rotation C2886(Williams) (16cm 4cm)								Faraday Rotation (1M) C2886(Williams) (16cm 4cm)				
LST			6				12			18		0		

Stations

H214 W98 N5 N14 W104 W113 W392

Baselines (m)

82,92,132,138,138,144,216,230,240,247,4270,4378,4383,4408,4500

Australia Telescope Compact Array

Schedule:- 14 Oct - 27 Oct

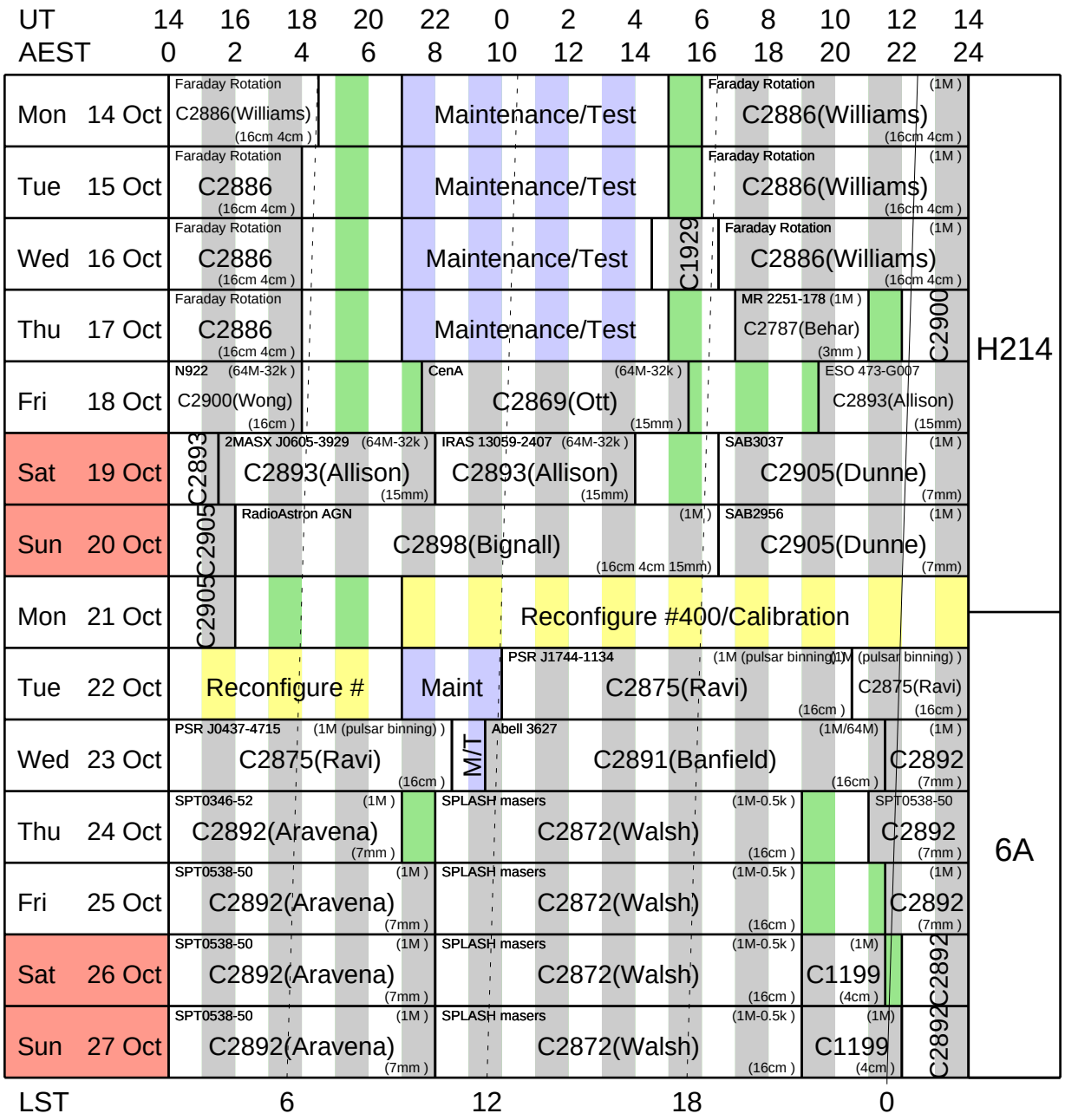

	Stations	Baselines (m)
H214	W98 N5 N14 W104 W113 W392	82,92,132,138,138,144,216,230,240,247,4270,4378,4383,4408,4500
6A	W4 W45 W102 W173 W195 W392	337,628,872,1087,1432,1500,1959,2296,2587,2923,3015,3352,4439,5311,5939

Australia Telescope Compact Array

Schedule:- 28 Oct - 10 Nov

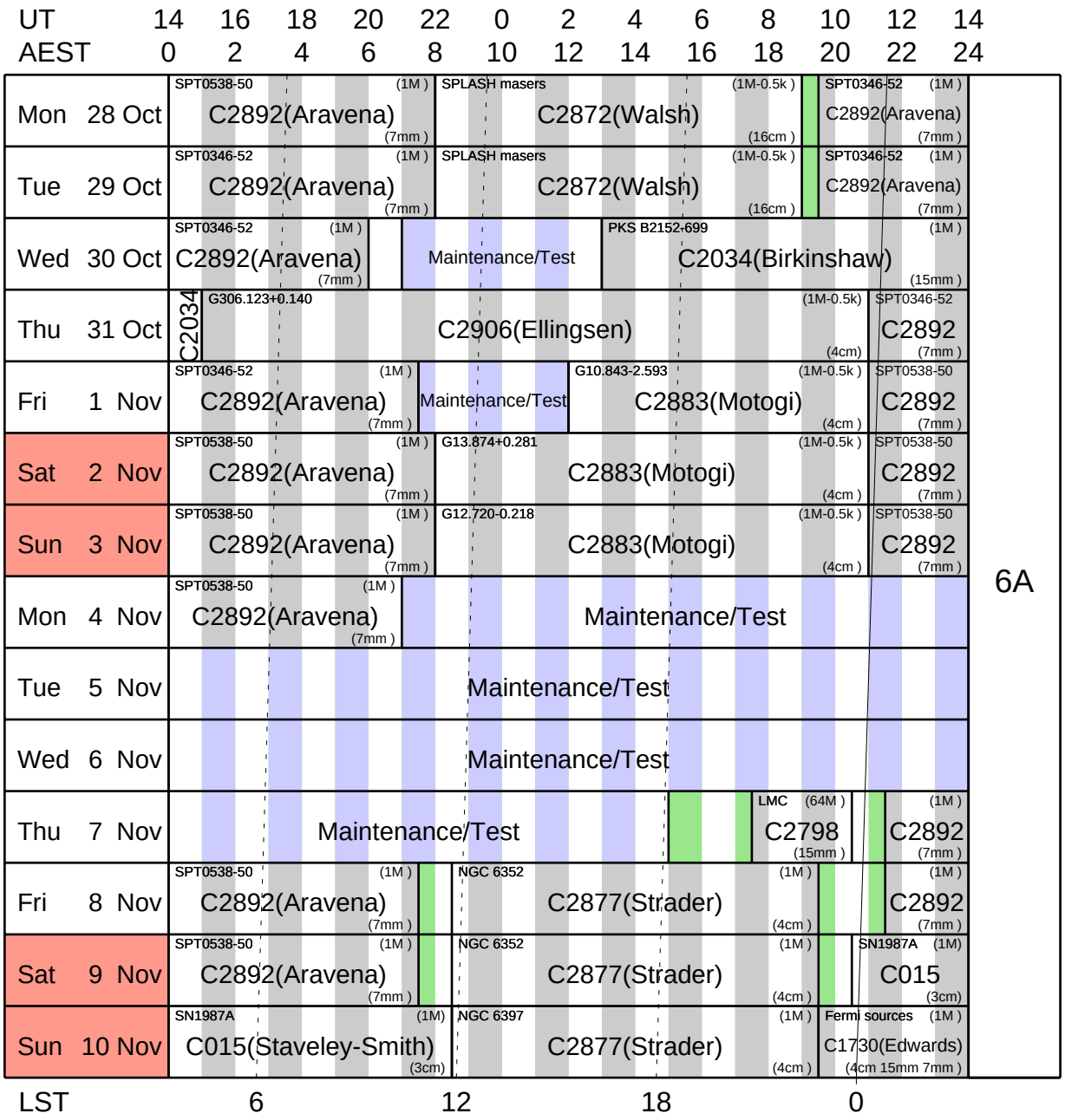

	Stations	Baselines (m)
6A	W4 W45 W102 W173 W195 W392	337,628,872,1087,1432,1500,1959,2296,2587,2923,3015,3352,4439,5311,5939

Australia Telescope Compact Array

Schedule:- 11 Nov - 24 Nov

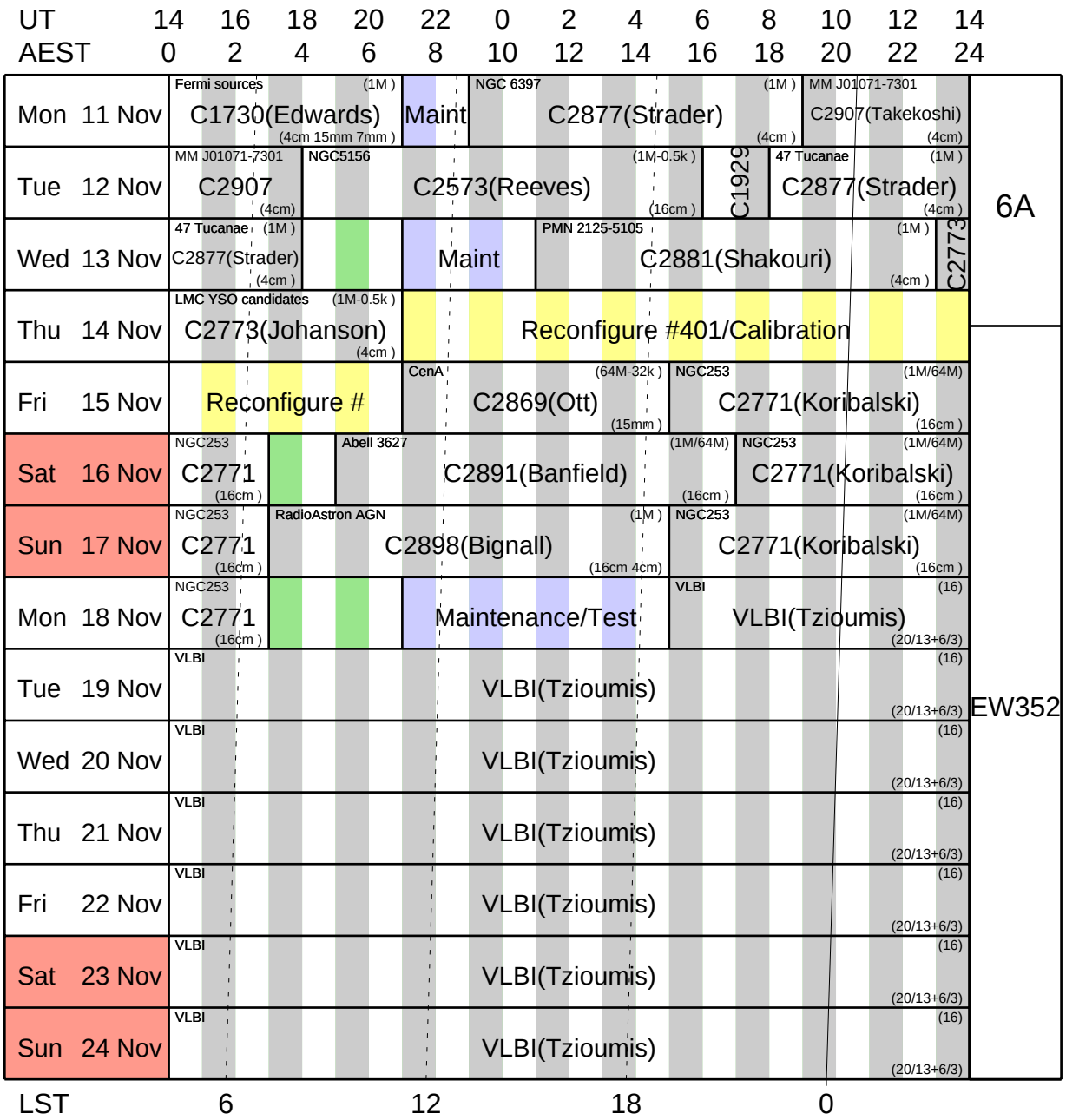

	Stations	Baselines (m)
6A	W4 W45 W102 W173 W195 W392	337,628,872,1087,1432,1500,1959,2296,2587,2923,3015,3352,4439,5311,5939
EW352	W102 W104 W109 W112 W125 W392	31,46,77,107,122,153,199,245,321,352,4087,4286,4332,4408,4438

Australia Telescope Compact Array

Schedule:- 25 Nov - 8 Dec

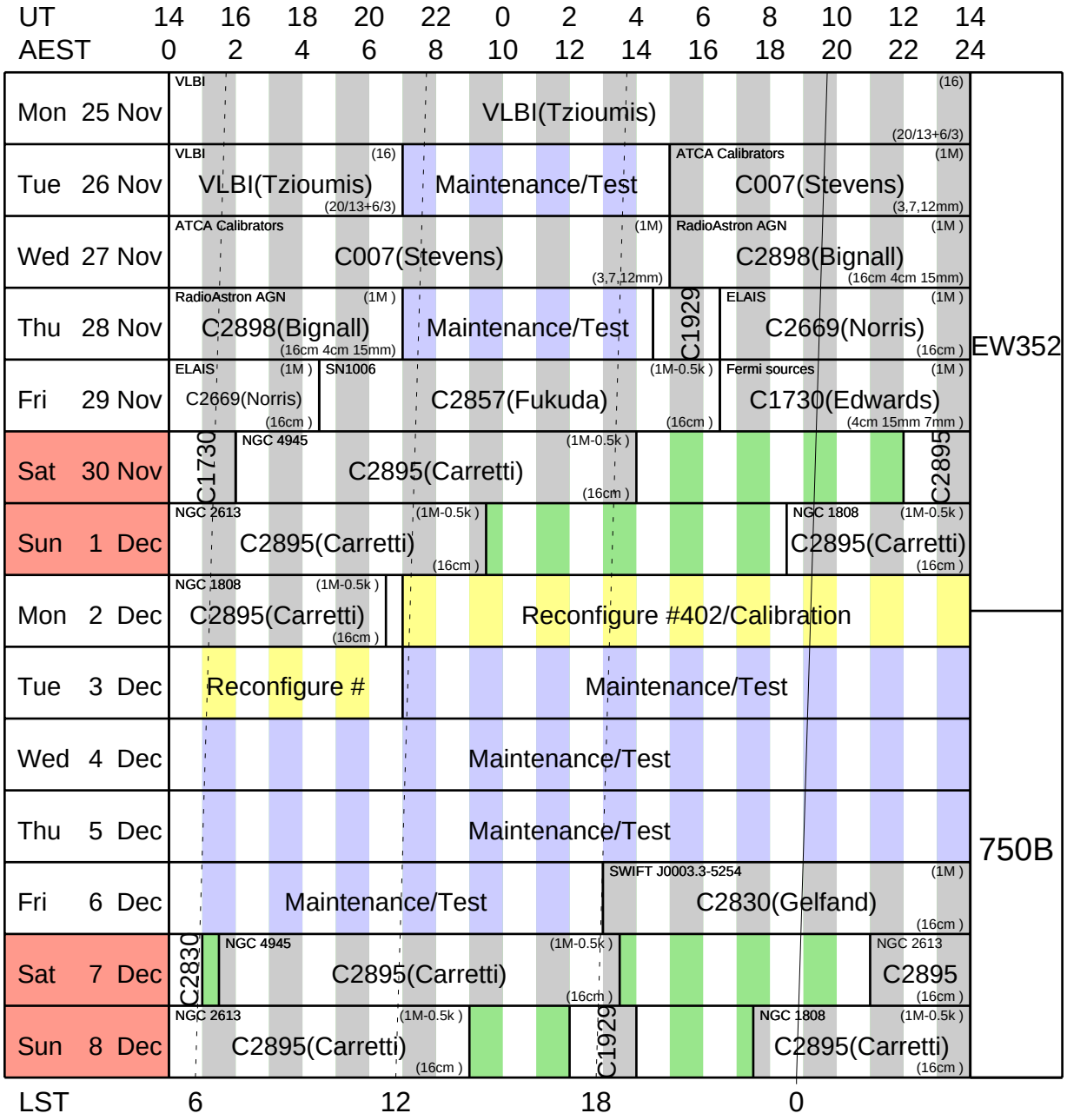

	Stations	Baselines (m)
EW352	W102 W104 W109 W112 W125 W392	31,46,77,107,122,153,199,245,321,352,4087,4286,4332,4408,4438
750B	W98 W109 W113 W140 W148 W392	61,122,168,230,413,474,536,597,643,765,3735,3857,4270,4332,4500

Australia Telescope Compact Array

Schedule:- 9 Dec - 22 Dec

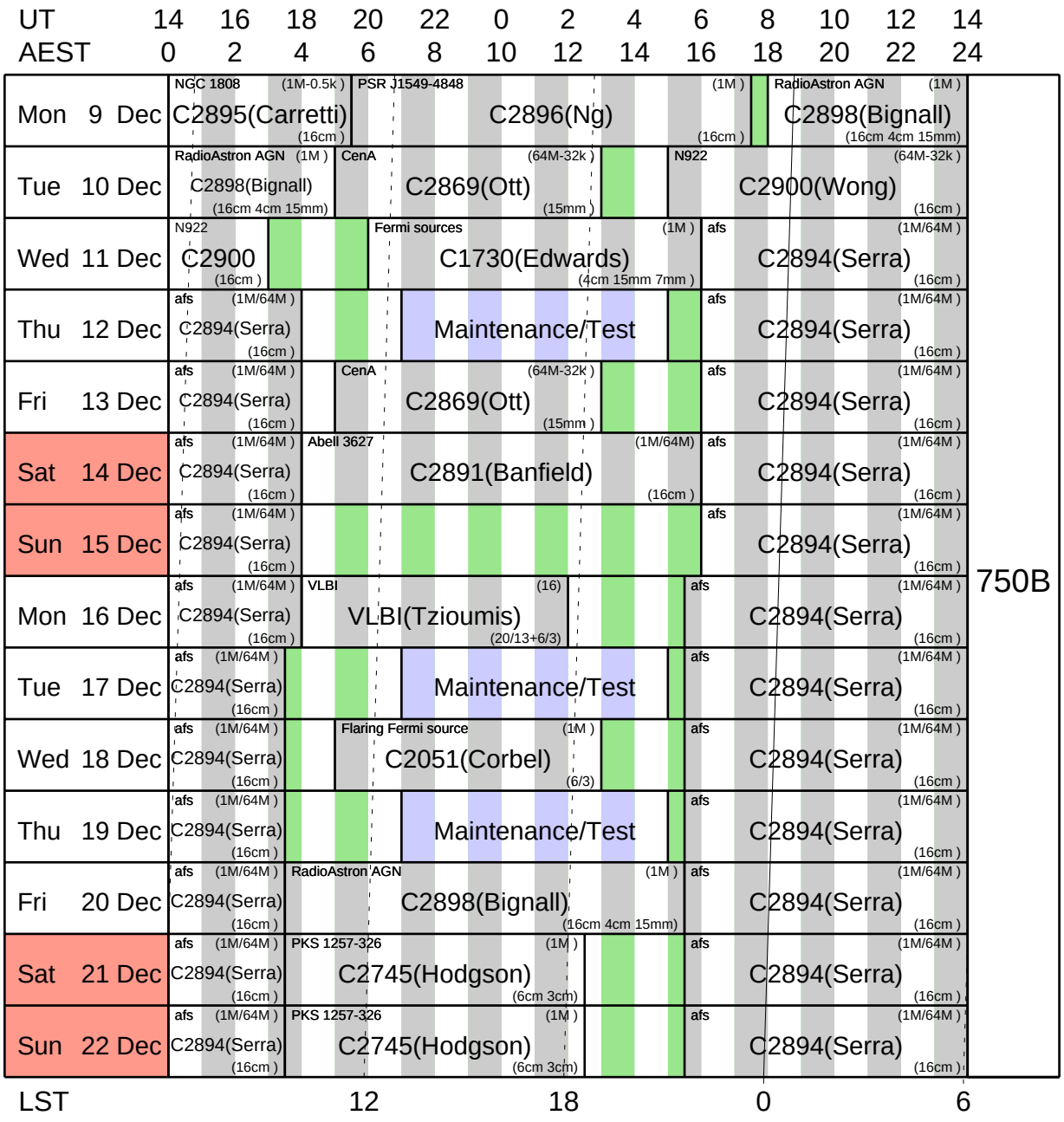

	Stations	Baselines (m)
750B	W98 W109 W113 W140 W148 W392	61,122,168,230,413,474,536,597,643,765,3735,3857,4270,4332,4500

Australia Telescope Compact Array

Schedule:- 23 Dec - 5 Jan

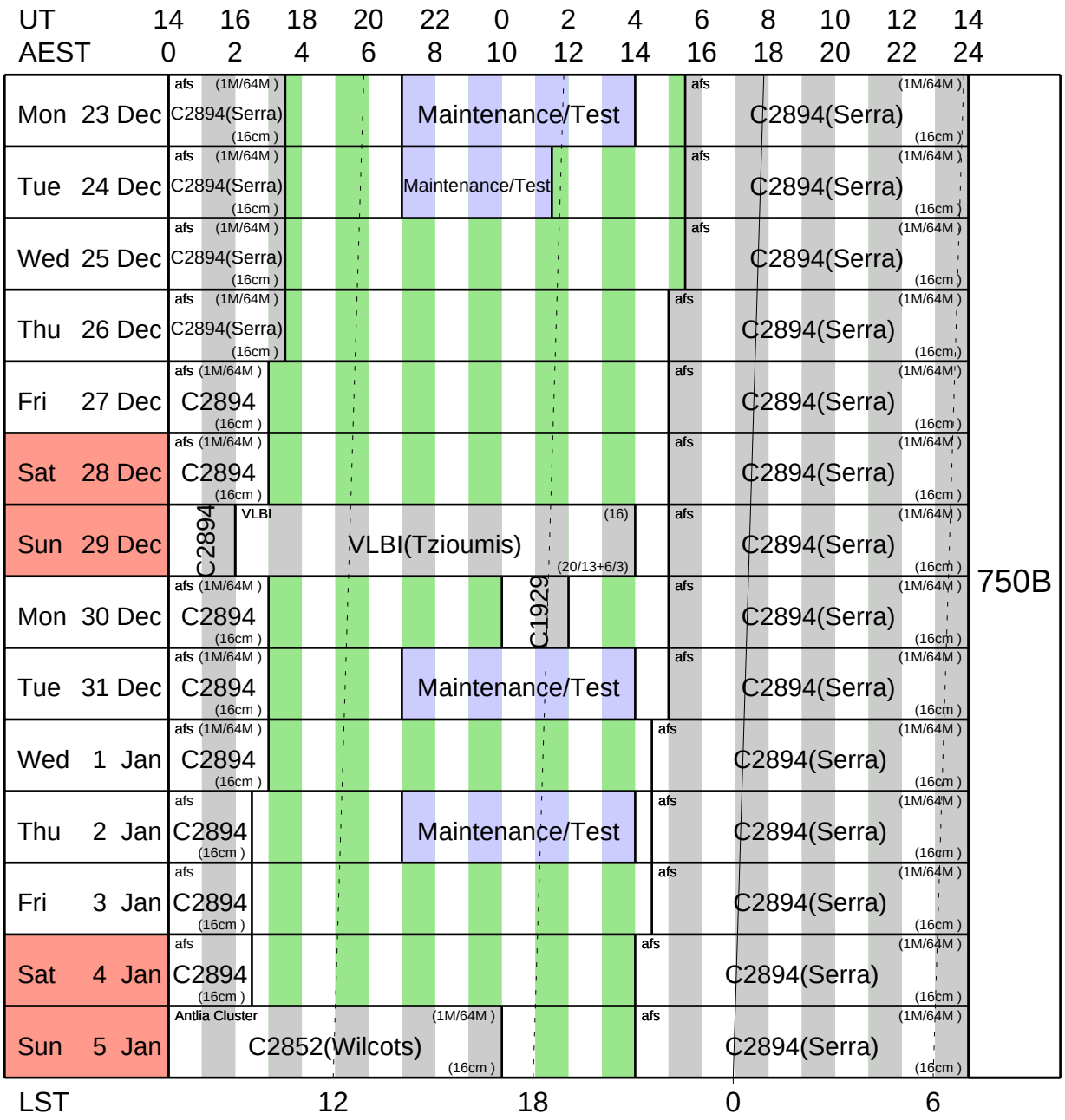

	Stations	Baselines (m)
750B	W98 W109 W113 W140 W148 W392	61,122,168,230,413,474,536,597,643,765,3735,3857,4270,4332,4500

Australia Telescope Compact Array

Schedule:- 6 Jan - 19 Jan

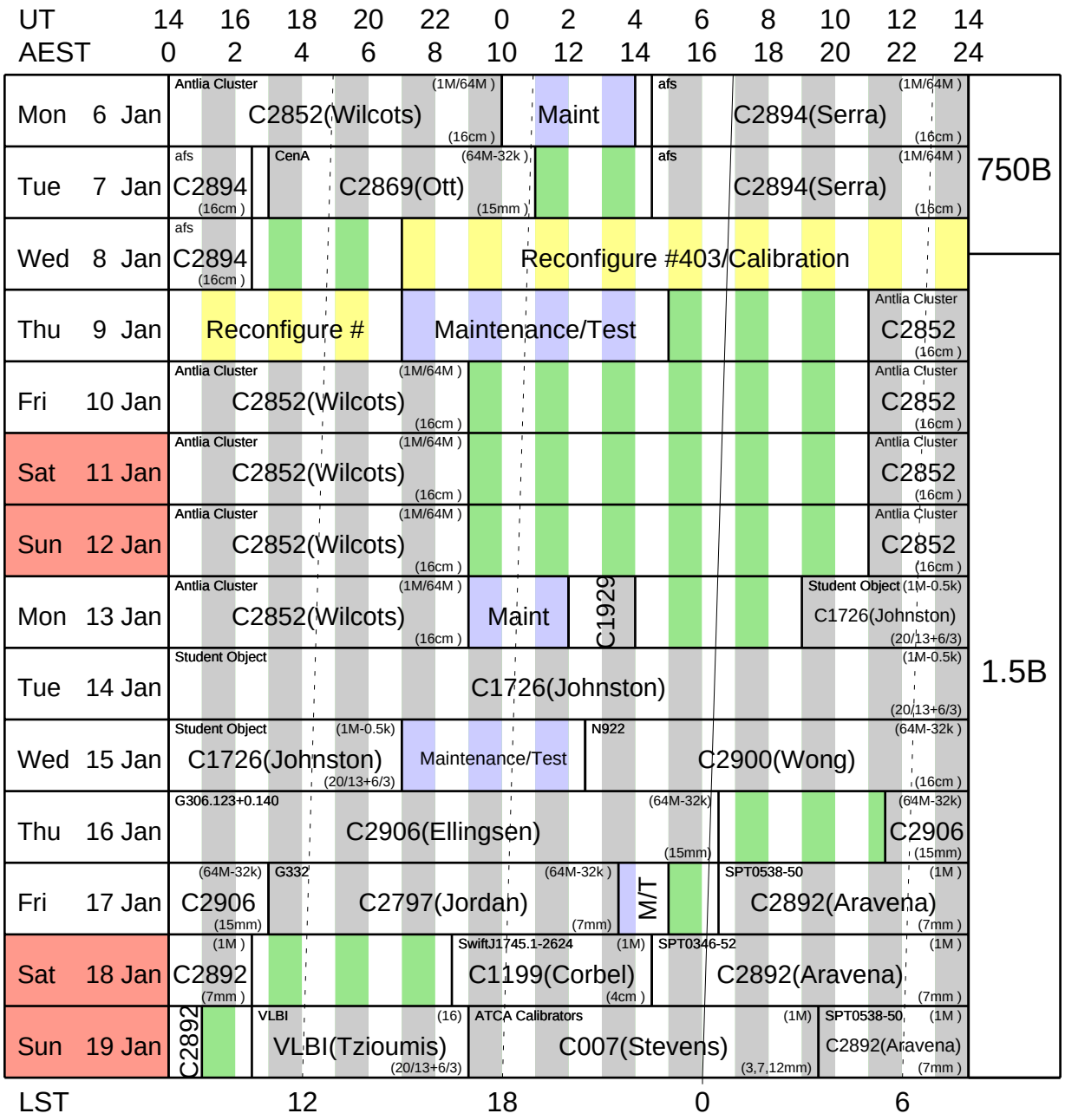

	Stations	Baselines (m)
750B	W98 W109 W113 W140 W148 W392	61,122,168,230,413,474,536,597,643,765,3735,3857,4270,4332,4500
1.5B	W111 W113 W163 W182 W195 W392	31,199,291,490,765,796,1056,1087,1255,1286,3015,3214,3505,4270,4301

Australia Telescope Compact Array

Schedule:- 20 Jan - 2 Feb

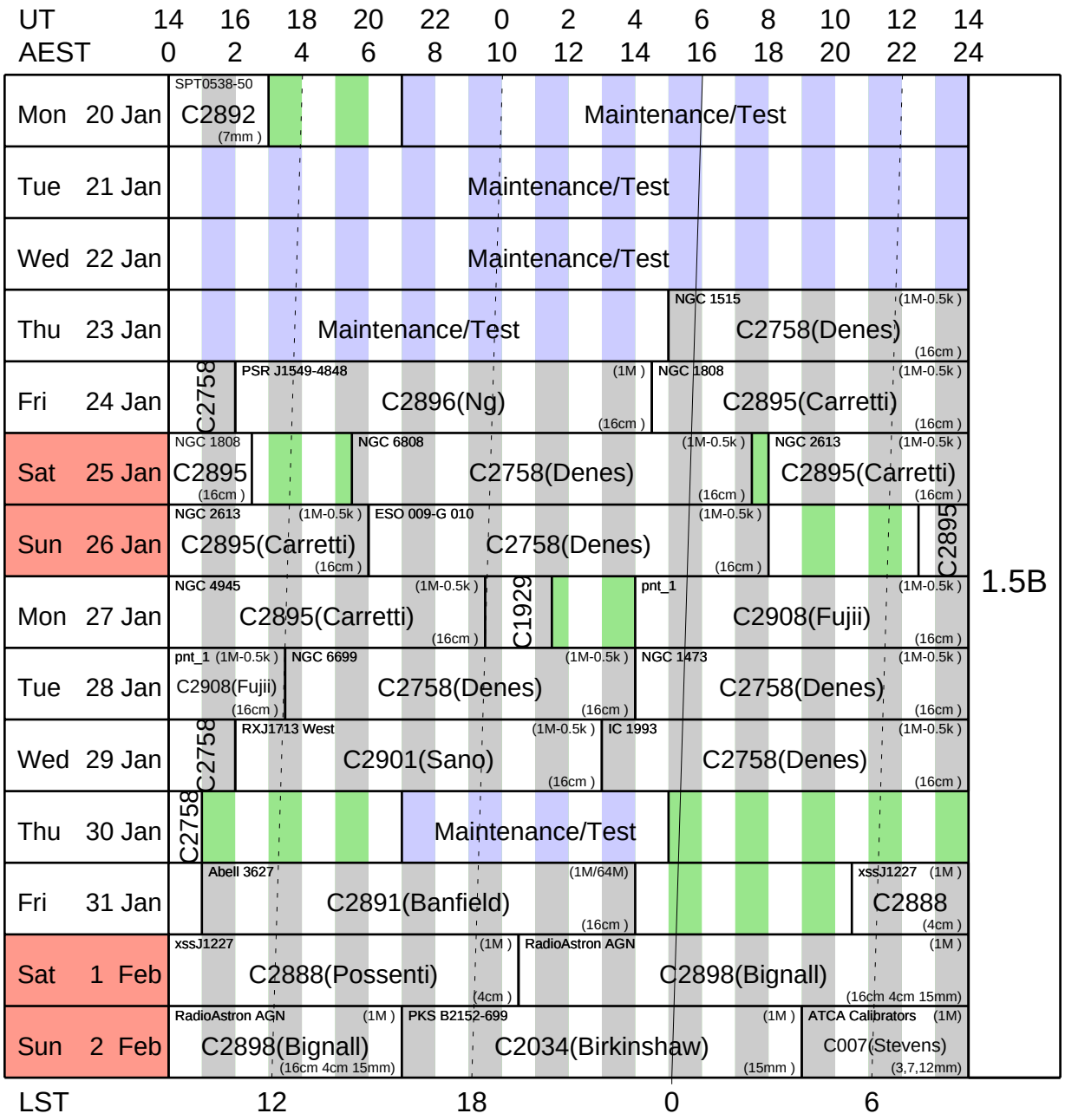

	Stations	Baselines (m)
1.5B	W111 W113 W163 W182 W195 W392	31,199,291,490,765,796,1056,1087,1255,1286,3015,3214,3505,4270,4301

Australia Telescope Compact Array

Schedule:- 3 Feb - 16 Feb

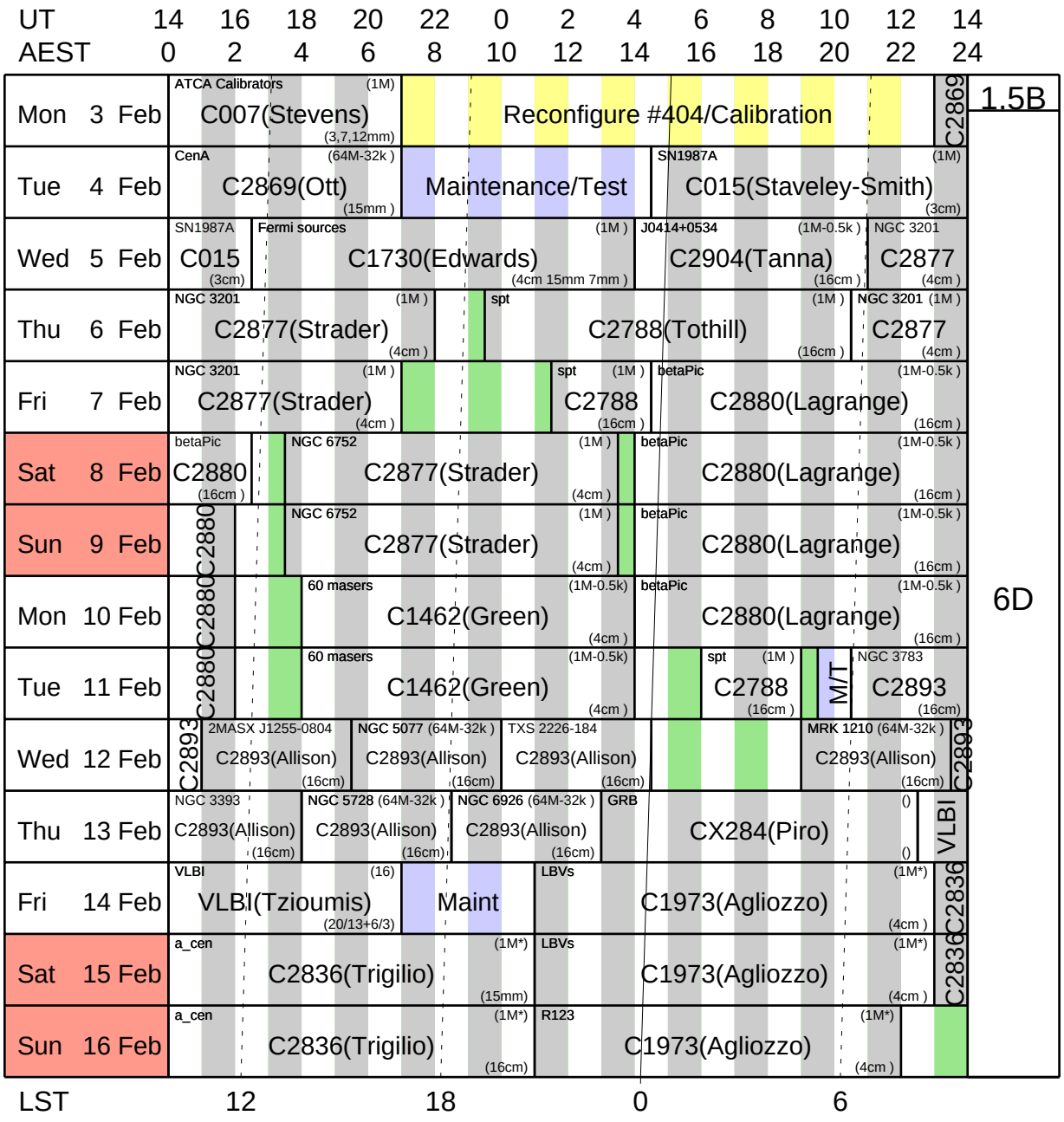

	Stations	Baselines (m)
1.5B	W111 W113 W163 W182 W195 W392	31,199,291,490,765,796,1056,1087,1255,1286,3015,3214,3505,4270,4301
6D	W8 W32 W84 W168 W173 W392	77,367,796,1163,1286,1362,2082,2158,2449,2525,3352,3429,4714,5510,5878

Australia Telescope Compact Array

Schedule:- 17 Feb - 2 Mar

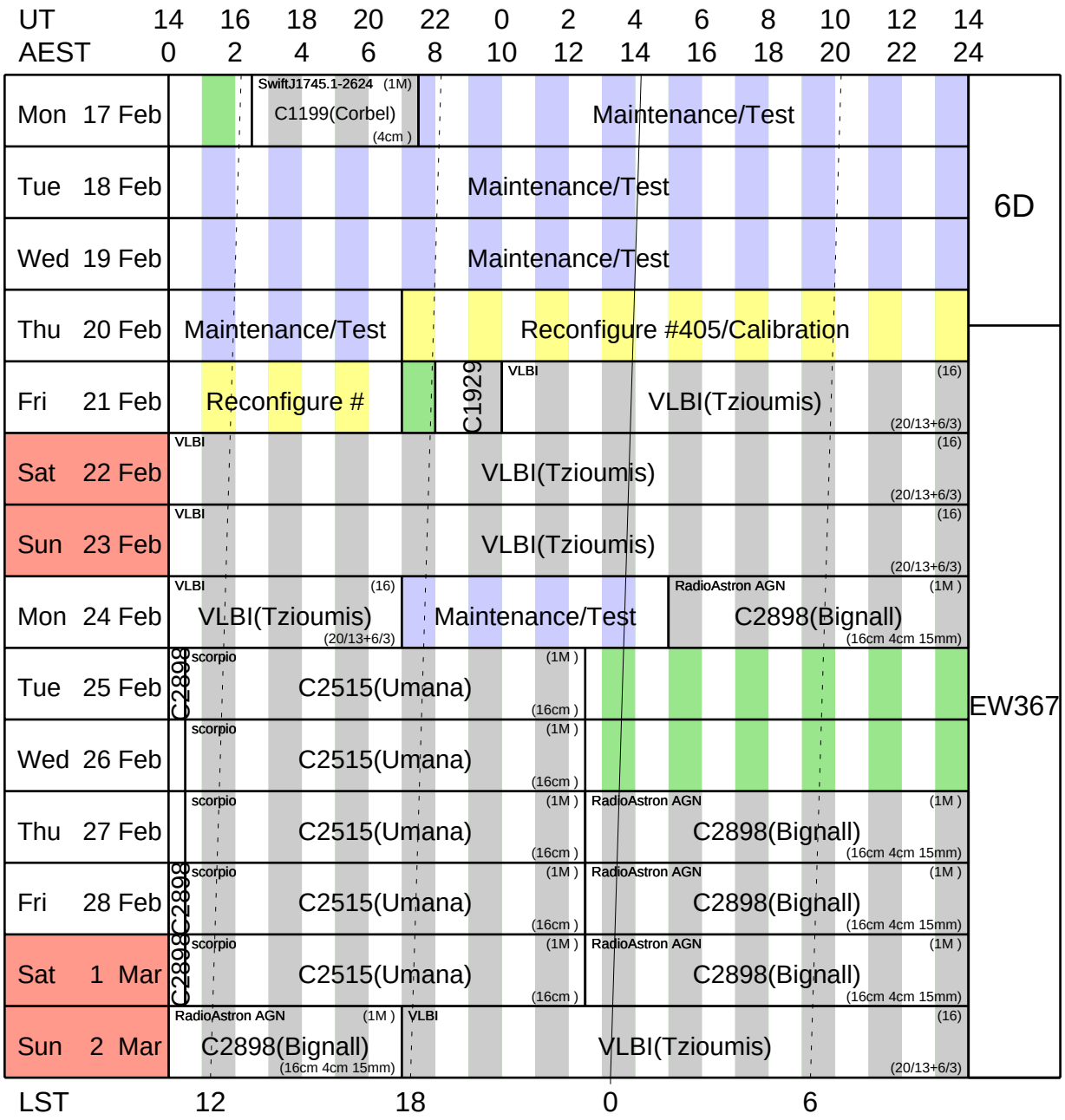

	Stations	Baselines (m)
6D	W8 W32 W84 W168 W173 W392	77,367,796,1163,1286,1362,2082,2158,2449,2525,3352,3429,4714,5510,5878
EW367	W104 W110 W113 W124 W128 W392	46,61,92,138,168,214,230,276,306,367,4041,4102,4270,4316,4408

Australia Telescope Compact Array

Schedule:- 3 Mar - 16 Mar

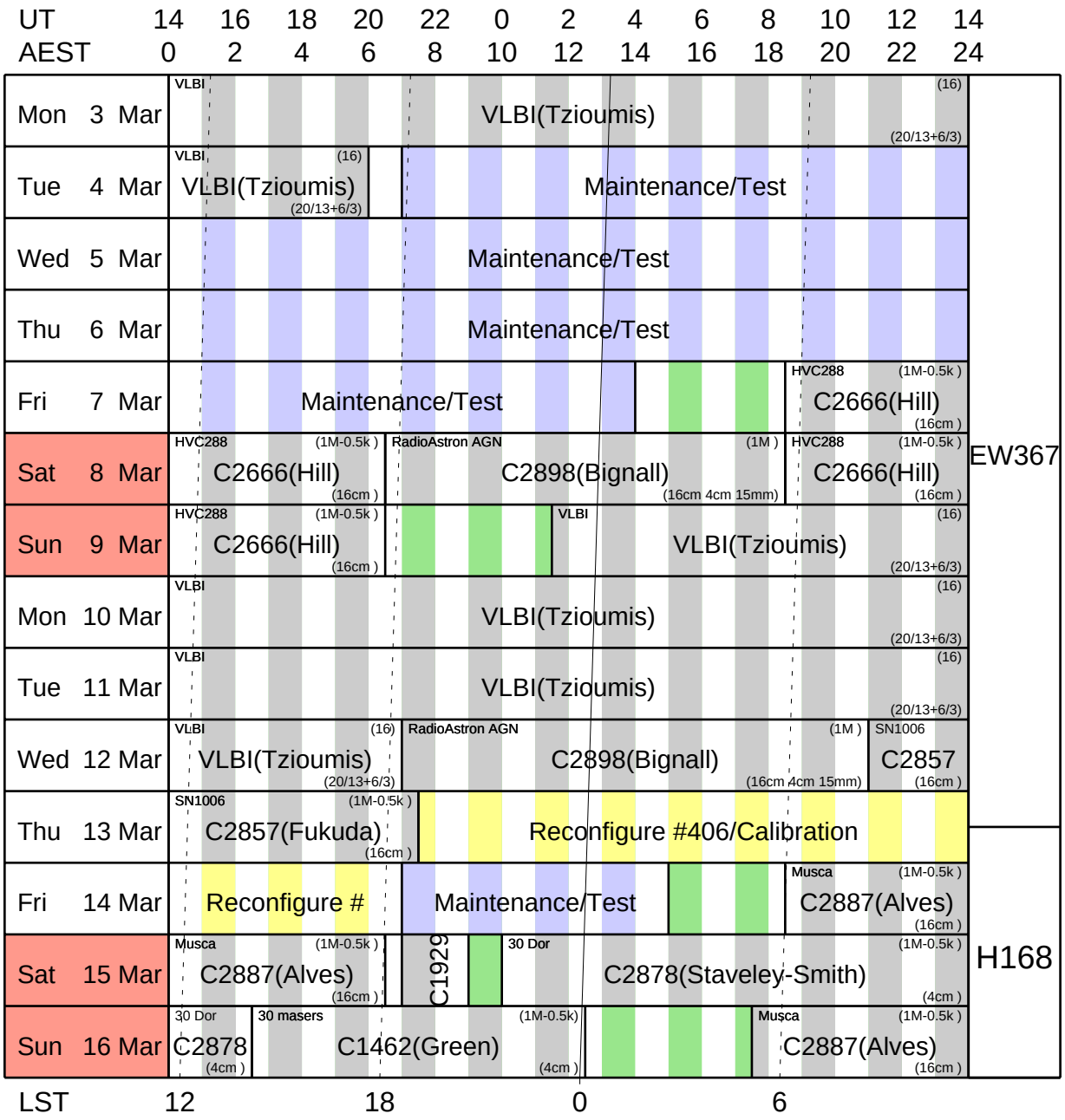

	Stations	Baselines (m)
EW367	W104 W110 W113 W124 W128 W392	46,61,92,138,168,214,230,276,306,367,4041,4102,4270,4316,4408
H168	W100 N11 N7 W104 W111 W392	61,61,107,111,132,141,168,171,185,192,4301,4379,4381,4408,4469

Australia Telescope Compact Array

Schedule:- 17 Mar - 30 Mar

UT	14	16	18	20	22	0	2	4	6	8	10	12	14
AEST	0	2	4	6	8	10	12	14	16	18	20	22	24

Mon	17 Mar	Musca (1M-0.5k) C2887(Alves) (16cm)	M17 (1M-0.5k) C2878(Staveley-Smith) (4cm)	VLBI (16) VLBI(Tzioumis) (20/13+6/3)
Tue	18 Mar	VLBI (16) VLBI(Tzioumis) (20/13+6/3)		
Wed	19 Mar	VLBI (16) VLBI(Tzioumis) (20/13+6/3)		
Thu	20 Mar	VLBI (16) VLBI(Tzioumis) (20/13+6/3)	Maintenance/Test	Faraday Rotation (1M) C2886(Williams) (16cm 4cm)
Fri	21 Mar	Faraday Rotation (1M) C2886(Williams) (16cm 4cm)	Maintenance/Test	Faraday Rotation (1M) C2886(Williams) (16cm 4cm)
Sat	22 Mar	Faraday Rotation (1M) C2886(Williams) (16cm 4cm)	RadioAstron AGN (1M) C2898(Bignall) (16cm 4cm)	Faraday Rotation (1M) C2886(Williams) (16cm 4cm)
Sun	23 Mar	Faraday Rotation (1M) C2886(Williams) (16cm 4cm)		Faraday Rotation (1M) C2886(Williams) (16cm 4cm)
Mon	24 Mar	Faraday Rotation (1M) C2886(Williams) (16cm 4cm)	Maintenance/Test	C2891
Tue	25 Mar	Abell 3627 (1M/64M) C2891(Banfield) (16cm)	Maintenance/Test	ATCA Calibrators (1M) C007(Stevens) (3,7,12mm)
Wed	26 Mar	ATCA Calibrators (1M) C007(Stevens) (3,7,12mm)		RadioAstron AGN (1M) C2898(Bignall) (16cm 4cm 15mm) C2879
Thu	27 Mar	Class I masers (1M) C2879(Chen) (7mm)	Fermi sources (1M) C1730(Edwards) (4cm 15mm 7mm)	VLBI VLBI
Fri	28 Mar	VLBI (16) VLBI(Tzioumis) (20/13+6/3)	Maintenance/Test	NGC 5506 C2787 (3mm)
Sat	29 Mar	NGC 5506 (1M) C2787(Behar) (3mm)	Class I masers (1M) C2879(Chen) (7mm)	NGC 3783 (1M) C2787(Behar) (3mm)
Sun	30 Mar	NGC 3783 (1M) C2787(Behar) (3mm)		NGC4945 (1M/64M) C2874(Sun) (4cm)

H168

LST	18	0	6	12

Stations	Baselines (m)
H168 W100 N11 N7 W104 W111 W392	61,61,107,111,132,141,168,171,185,192,4301,4379,4381,4408,4469

Australia Telescope Compact Array

Schedule:- 31 Mar - 13 Apr

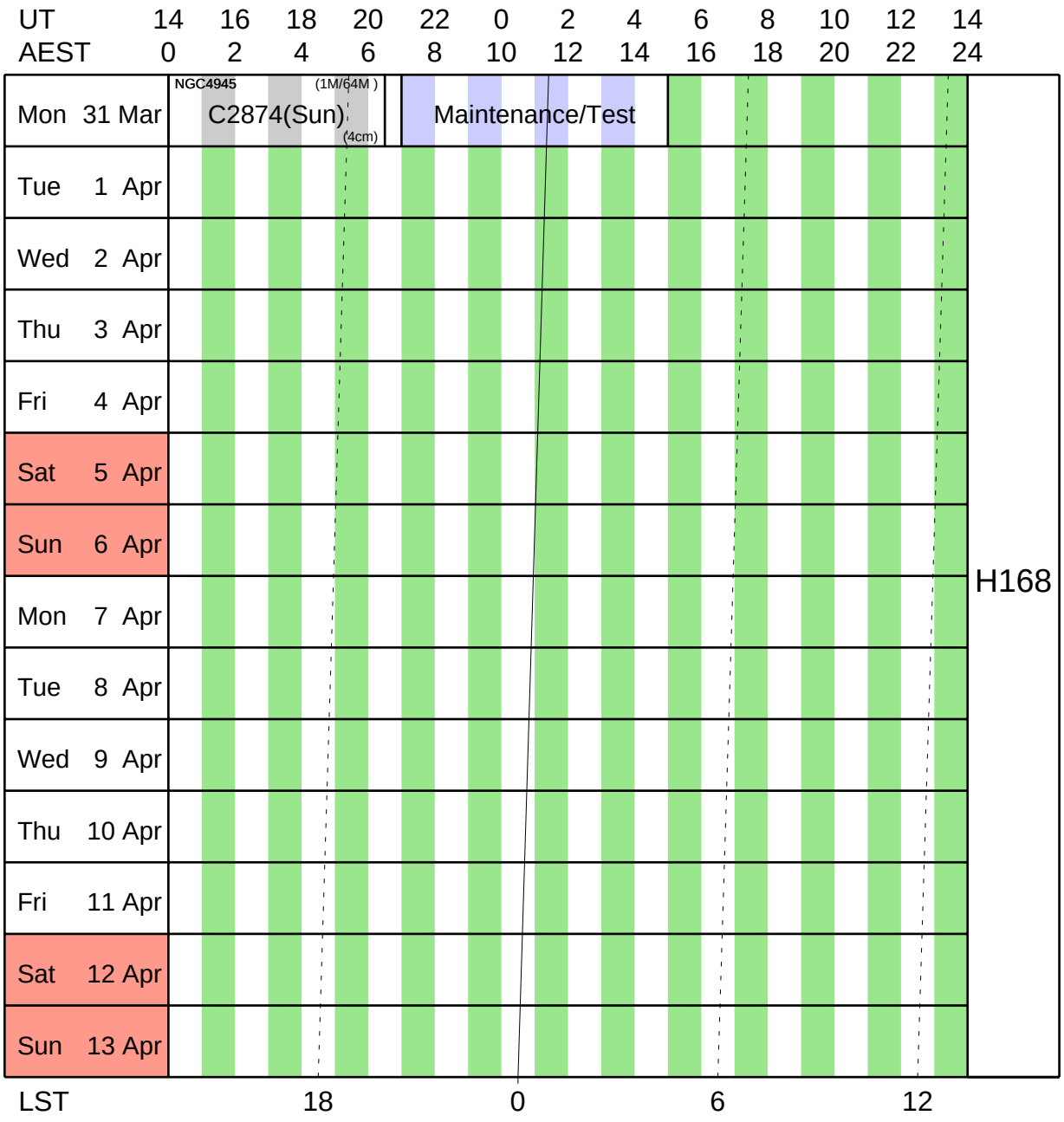

Stations	Baselines (m)
H168 W100 N11 N7 W104 W111 W392	61,61,107,111,132,141,168,171,185,192,4301,4379,4381,4408,4469