Australia Telescope Compact Array

Schedule:- 29 Sep - 12 Oct

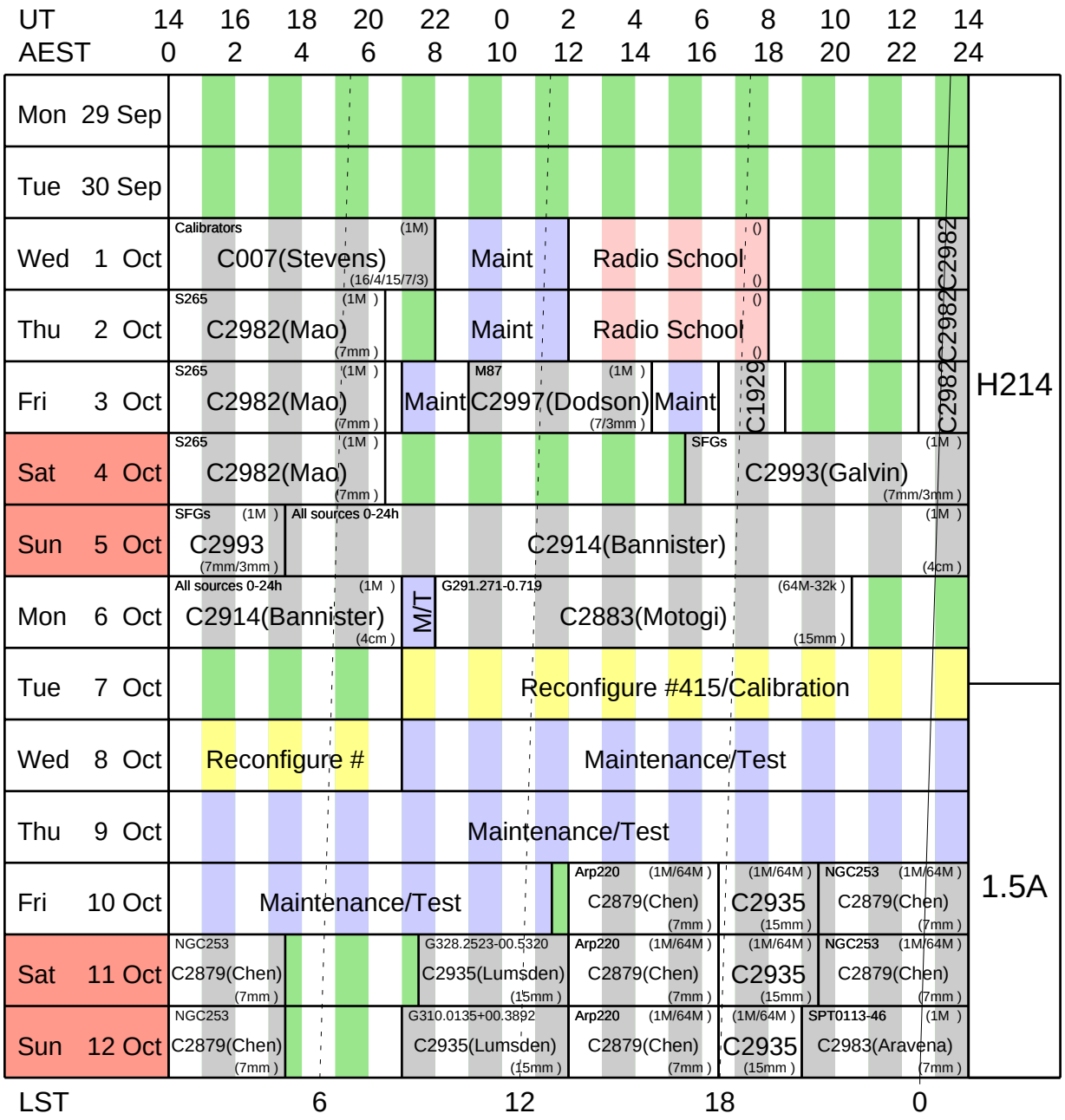

	Stations	Baselines (m)
H214	W98 N5 N14 W104 W113 W392	82,92,132,138,138,144,216,230,240,247,4270,4378,4383,4408,4500
1.5A	W100 W110 W147 W168 W196 W392	153,321,429,566,719,750,888,1041,1316,1469,3000,3429,3750,4316,4469

Australia Telescope Compact Array

Schedule:- 13 Oct - 26 Oct

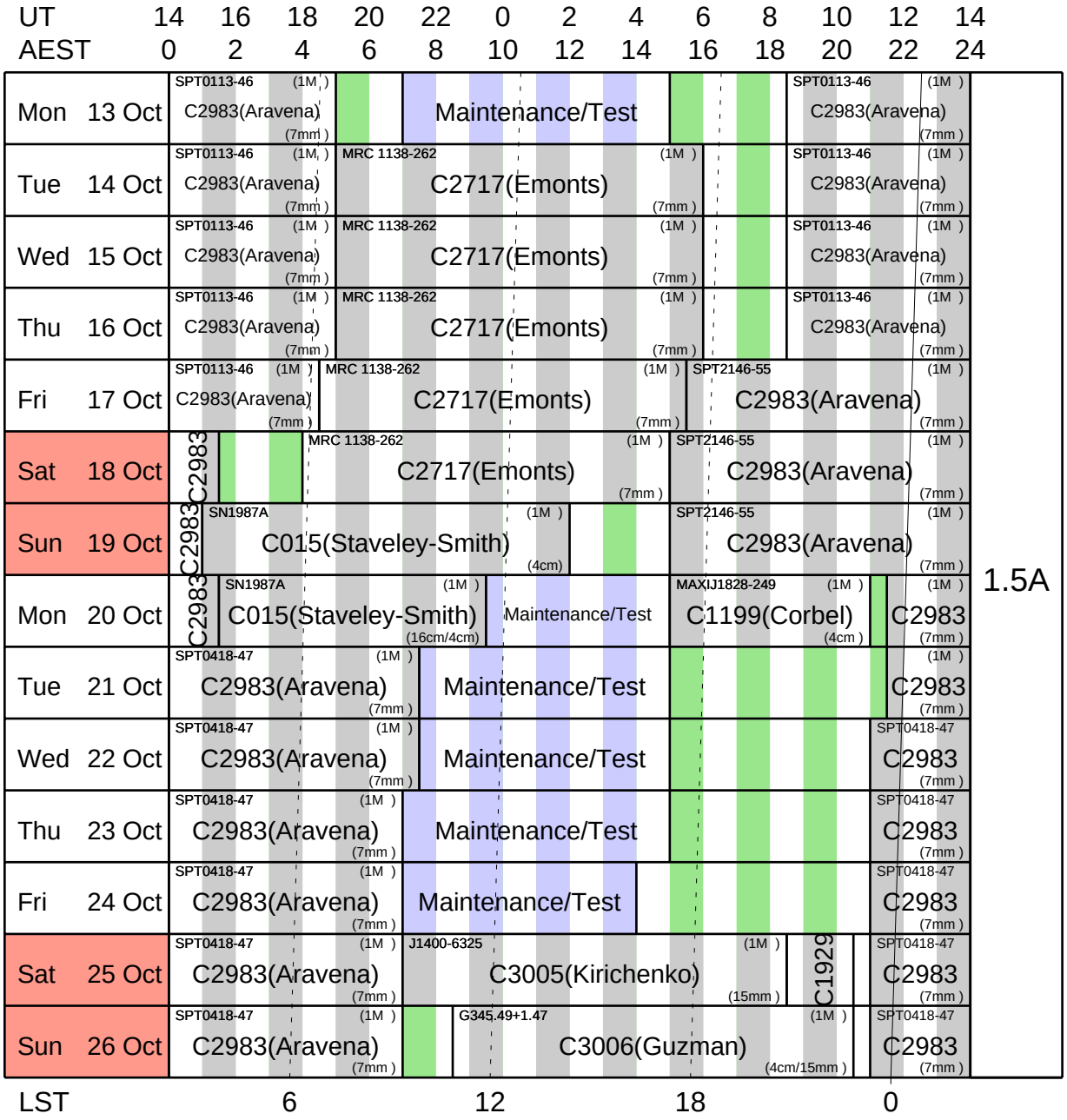

	Stations	Baselines (m)
1.5A	W100 W110 W147 W168 W196 W392	153,321,429,566,719,750,888,1041,1316,1469,3000,3429,3750,4316,4469

Australia Telescope Compact Array

Schedule:- 27 Oct - 9 Nov

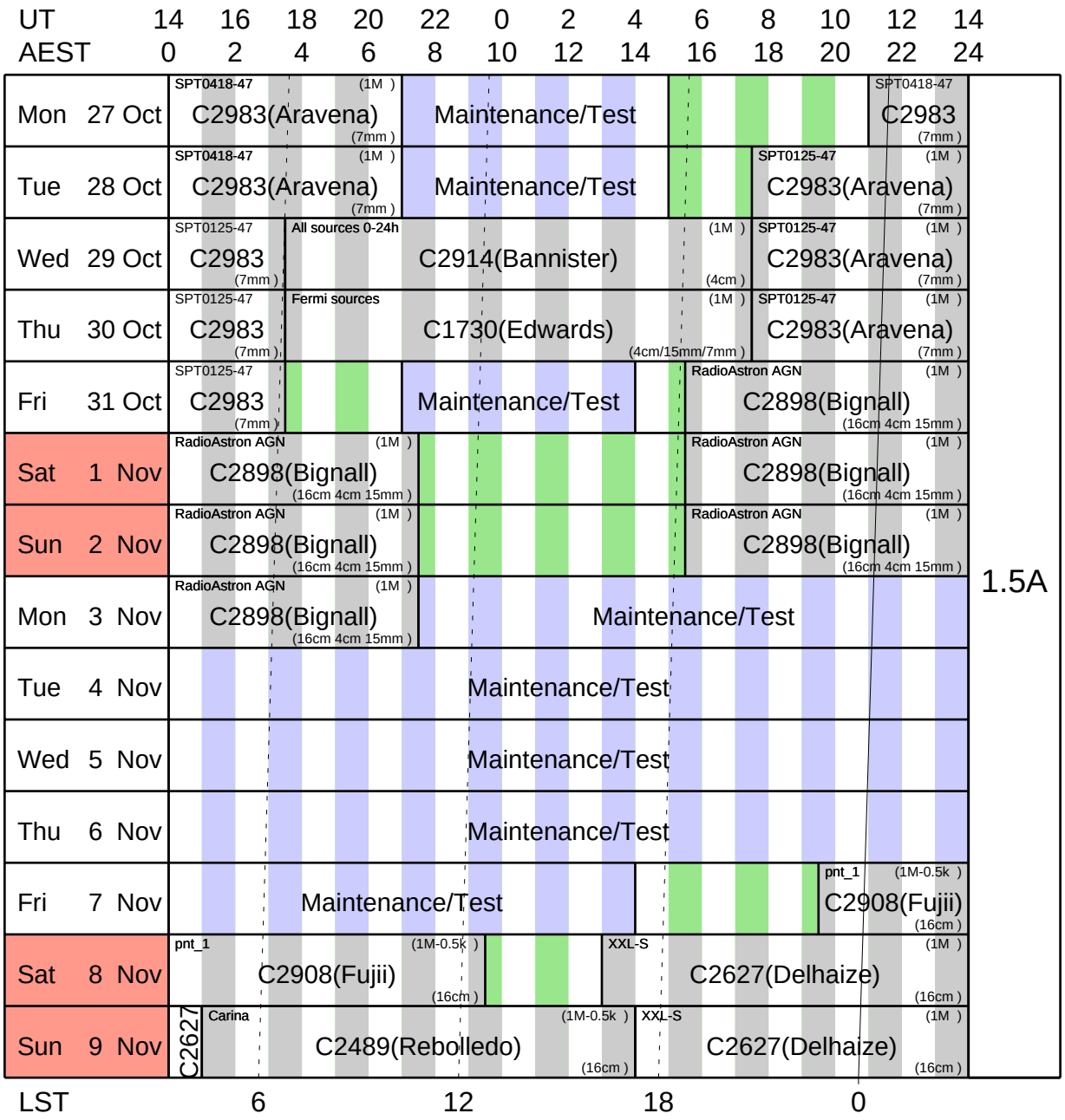

	Stations	Baselines (m)
1.5A	W100 W110 W147 W168 W196 W392	153,321,429,566,719,750,888,1041,1316,1469,3000,3429,3750,4316,4469

Australia Telescope Compact Array

Schedule:- 10 Nov - 23 Nov

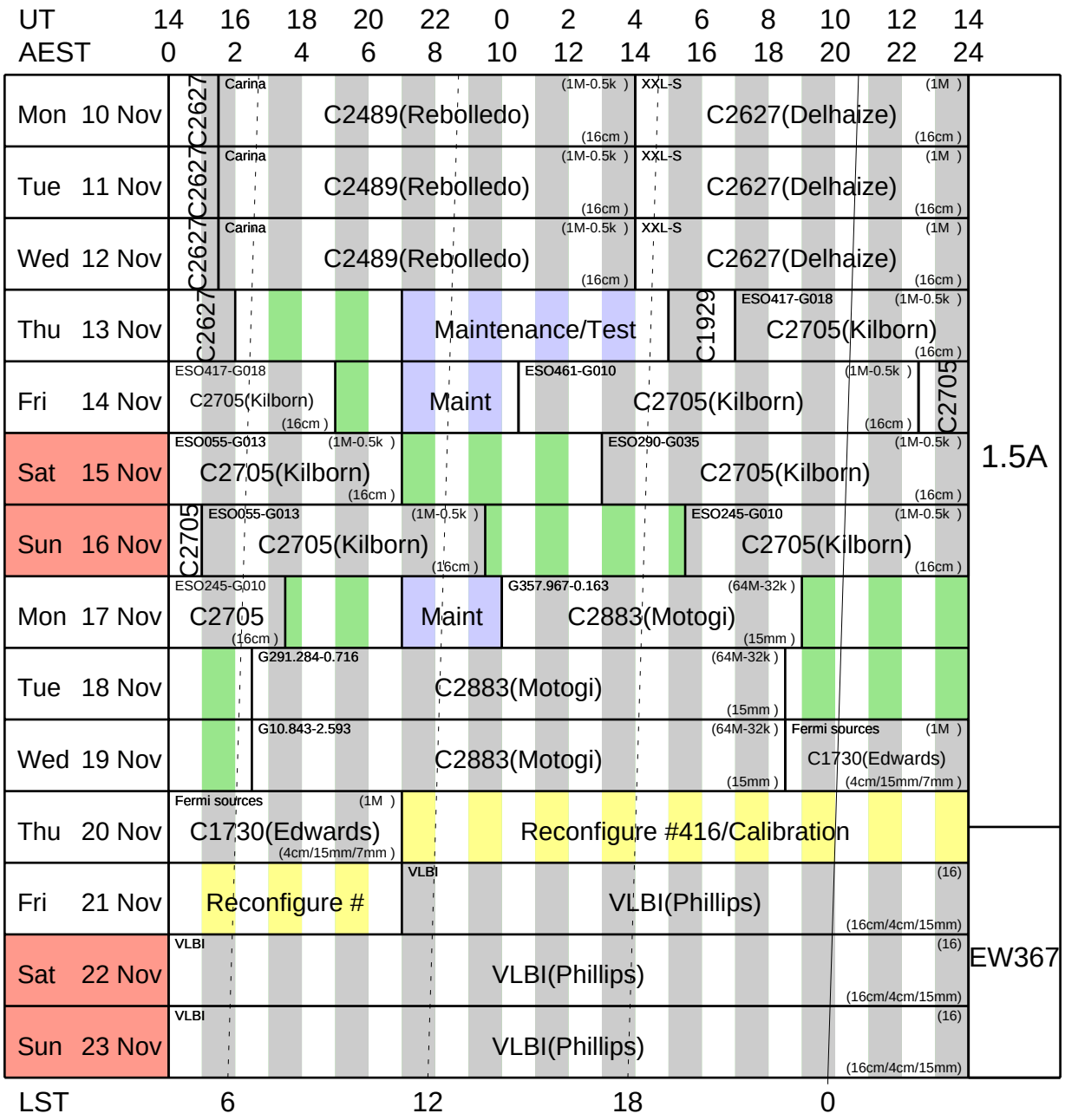

	Stations	Baselines (m)
1.5A	W100 W110 W147 W168 W196 W392	153,321,429,566,719,750,888,1041,1316,1469,3000,3429,3750,4316,4469
EW367	W104 W110 W113 W124 W128 W392	46,61,92,138,168,214,230,276,306,367,4041,4102,4270,4316,4408

Australia Telescope Compact Array

Schedule:- 24 Nov - 7 Dec

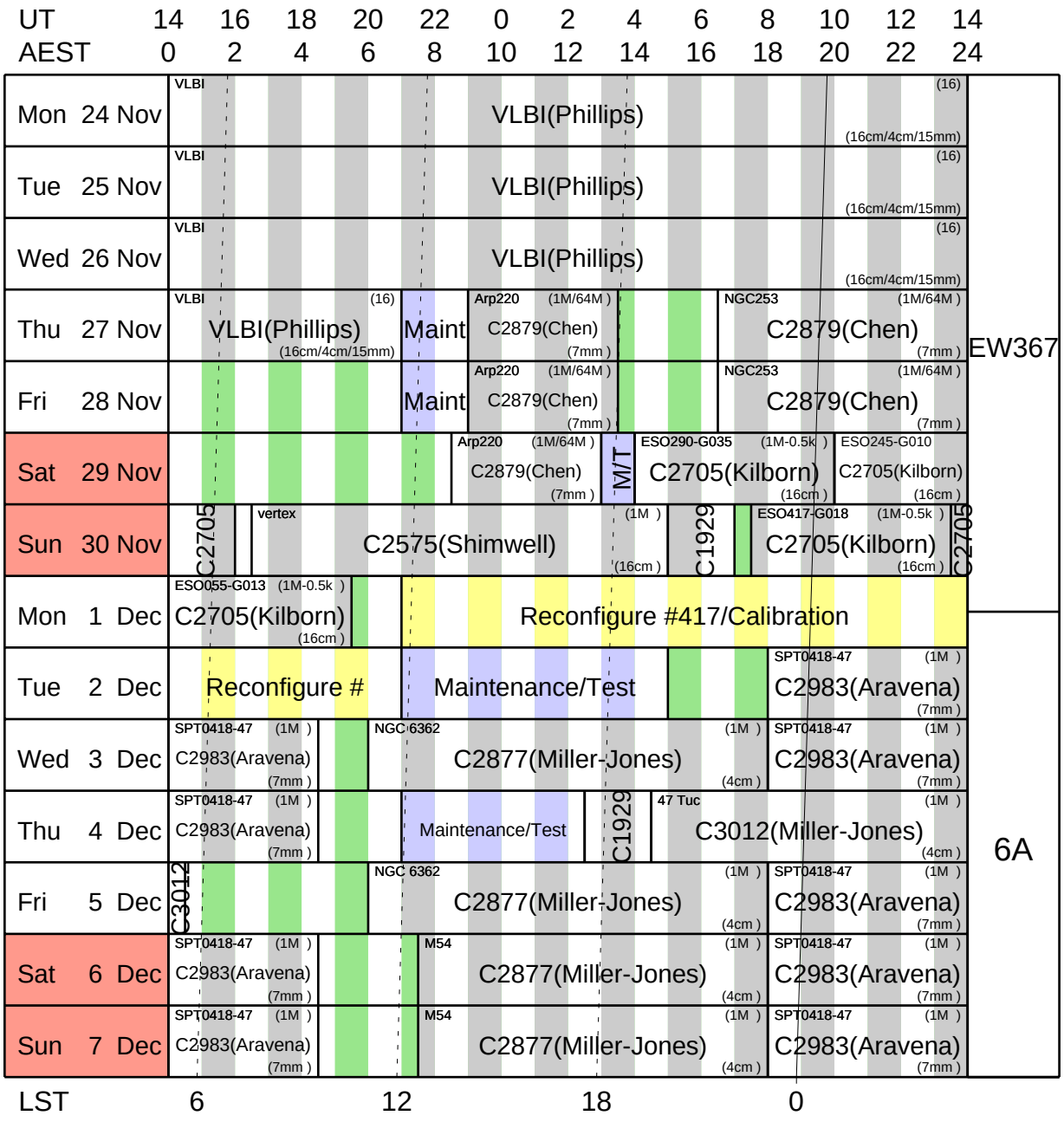

	Stations	Baselines (m)
EW367	W104 W110 W113 W124 W128 W392	46,61,92,138,168,214,230,276,306,367,4041,4102,4270,4316,4408
6A	W4 W45 W102 W173 W195 W392	337,628,872,1087,1432,1500,1959,2296,2587,2923,3015,3352,4439,5311,5939

Australia Telescope Compact Array

Schedule:- 8 Dec - 21 Dec

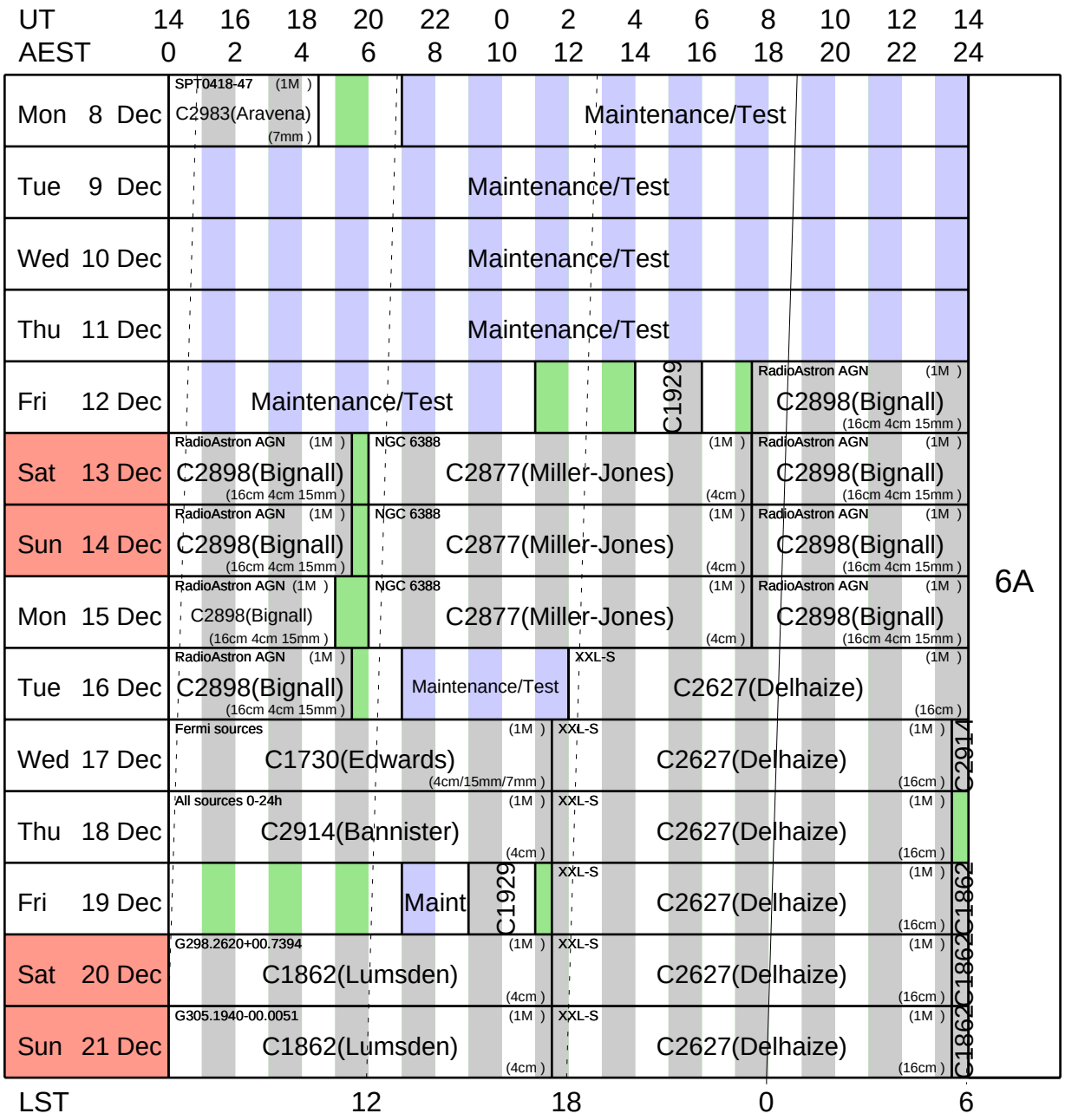

	Stations	Baselines (m)
6A	W4 W45 W102 W173 W195 W392	337,628,872,1087,1432,1500,1959,2296,2587,2923,3015,3352,4439,5311,5939

Australia Telescope Compact Array

Schedule:- 22 Dec - 4 Jan

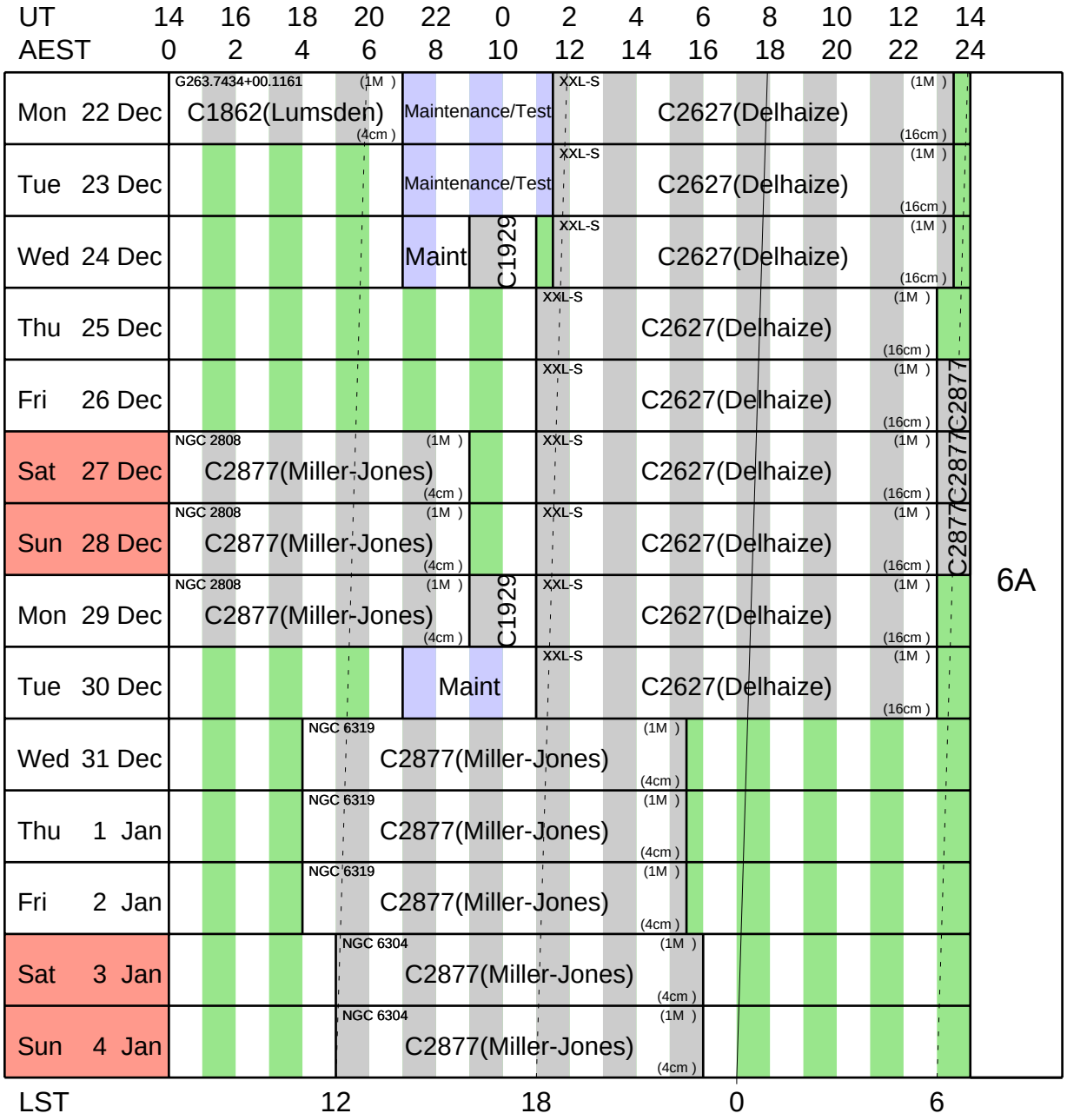

	Stations	Baselines (m)
6A	W4 W45 W102 W173 W195 W392	337,628,872,1087,1432,1500,1959,2296,2587,2923,3015,3352,4439,5311,5939

Australia Telescope Compact Array

Schedule:- 5 Jan - 18 Jan

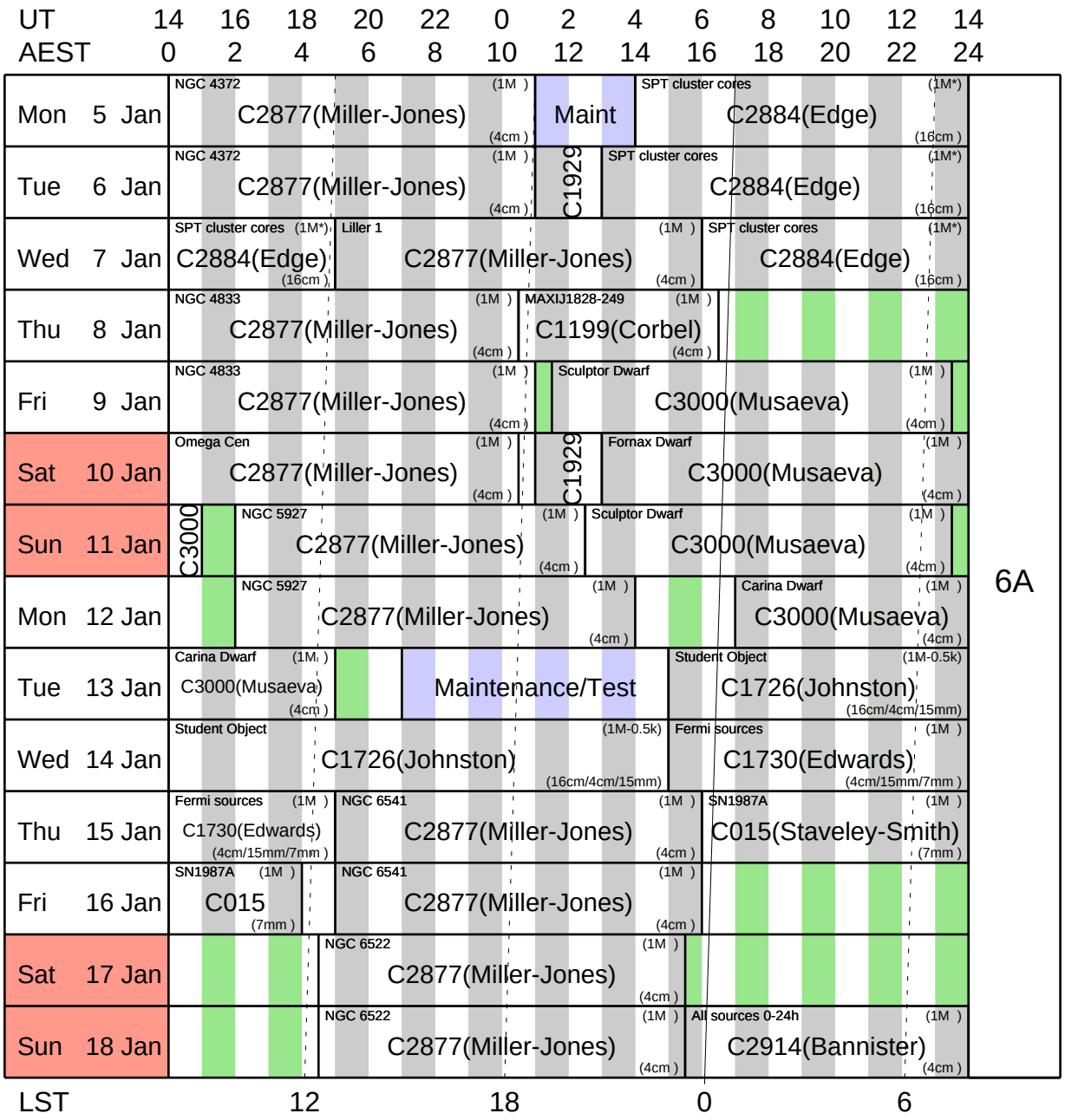

	Stations	Baselines (m)
6A	W4 W45 W102 W173 W195 W392	337,628,872,1087,1432,1500,1959,2296,2587,2923,3015,3352,4439,5311,5939

Australia Telescope Compact Array

Schedule:- 19 Jan - 1 Feb

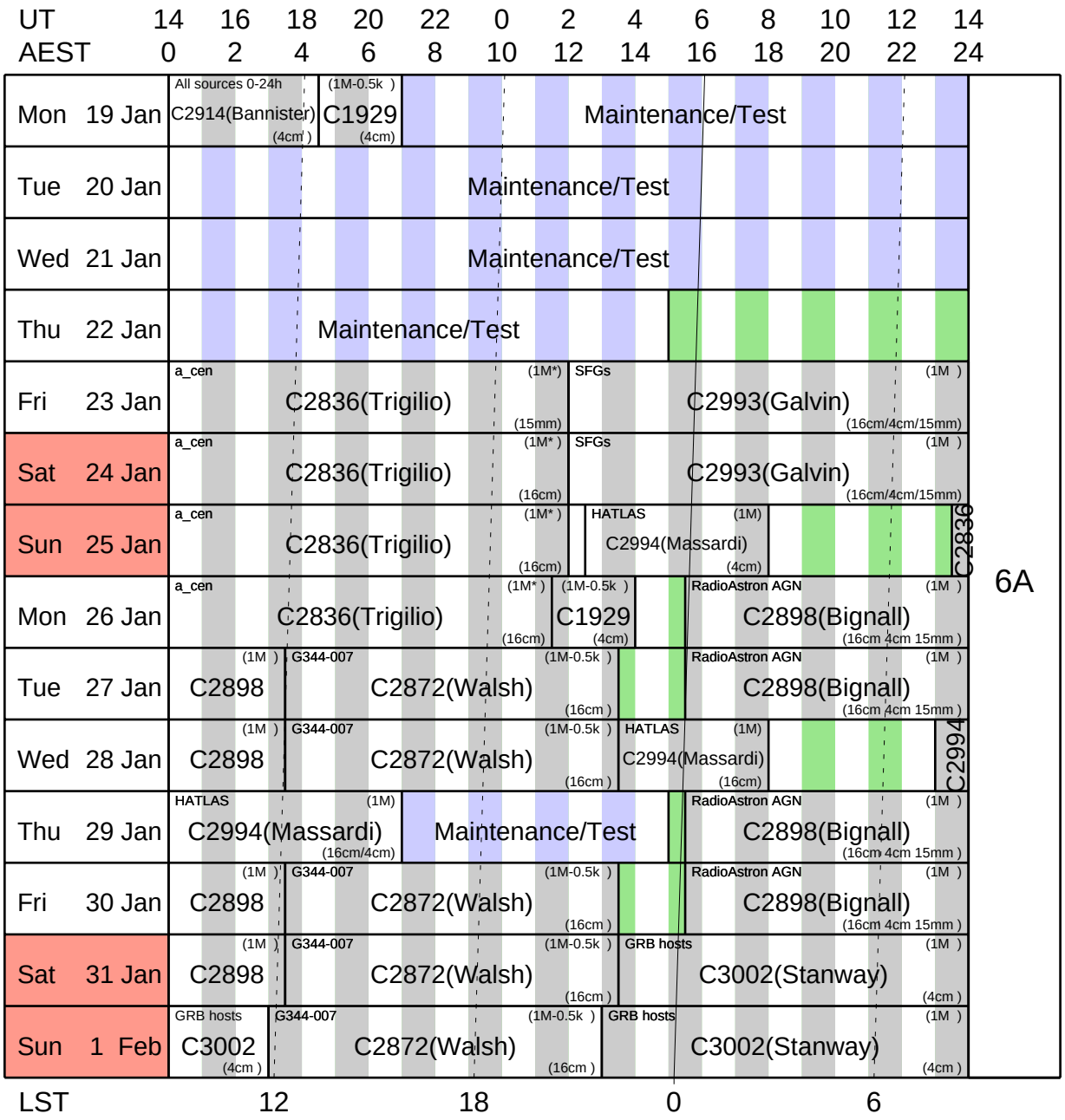

	Stations	Baselines (m)
6A	W4 W45 W102 W173 W195 W392	337,628,872,1087,1432,1500,1959,2296,2587,2923,3015,3352,4439,5311,5939

Australia Telescope Compact Array

Schedule:- 2 Feb - 15 Feb

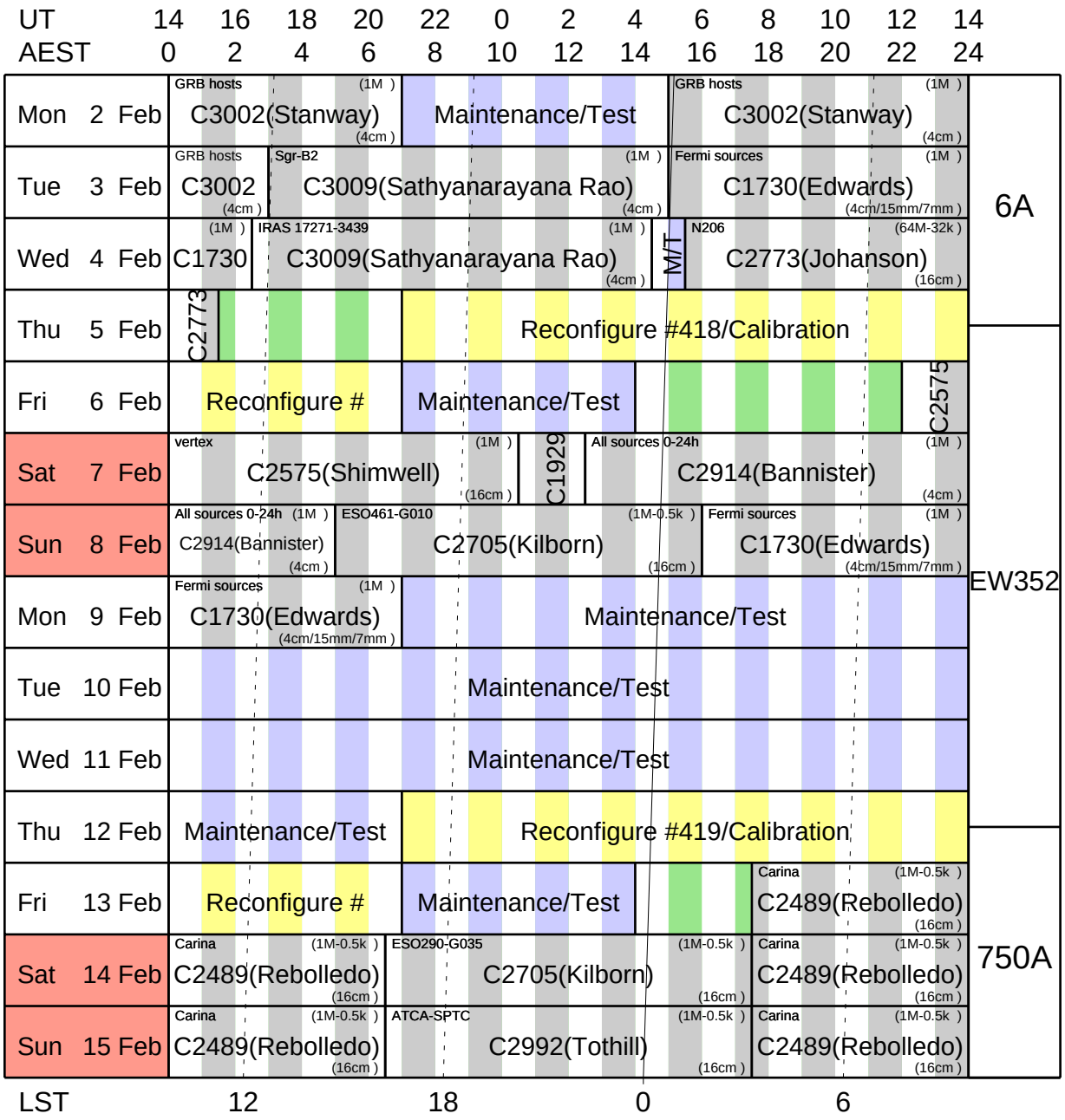

	Stations	Baselines (m)
6A	W4 W45 W102 W173 W195 W392	337,628,872,1087,1432,1500,1959,2296,2587,2923,3015,3352,4439,5311,5939
EW352	W102 W104 W109 W112 W125 W392	31,46,77,107,122,153,199,245,321,352,4087,4286,4332,4408,4438
750A	W147 W163 W172 W190 W195 W392	77,138,245,276,352,383,413,490,658,735,3015,3092,3367,3505,3750

Australia Telescope Compact Array

Schedule:- 16 Feb - 1 Mar

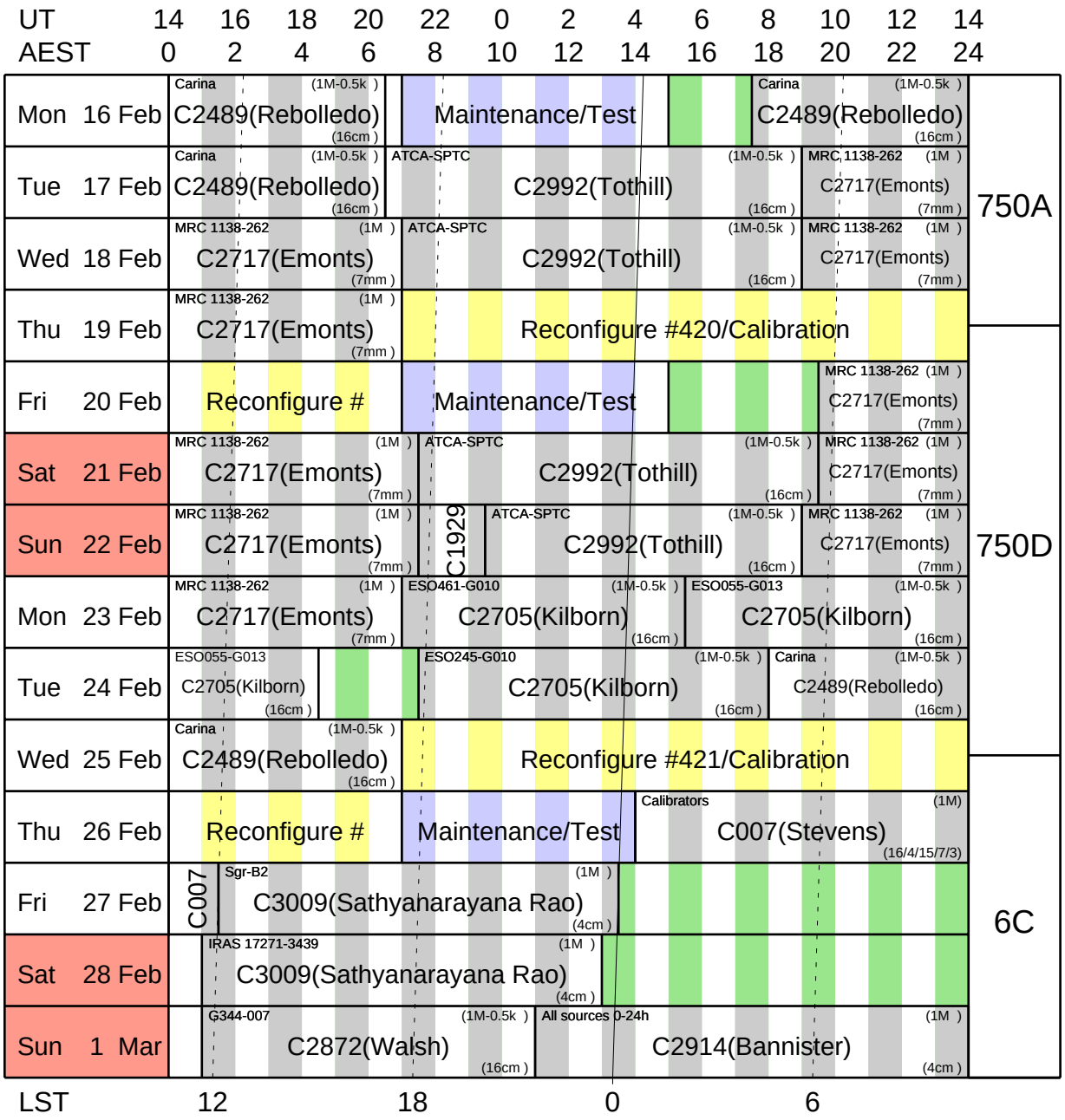

	Stations	Baselines (m)
750A	W147 W163 W172 W190 W195 W392	77,138,245,276,352,383,413,490,658,735,3015,3092,3367,3505,3750
750D	W100 W102 W128 W140 W147 W392	31,107,184,291,398,429,582,612,689,719,3750,3857,4041,4439,4469
6C	W0 W10 W113 W140 W182 W392	153,413,643,1056,1577,1730,1990,2143,2633,2786,3214,3857,4270,5847,6000

Australia Telescope Compact Array

Schedule:- 2 Mar - 15 Mar

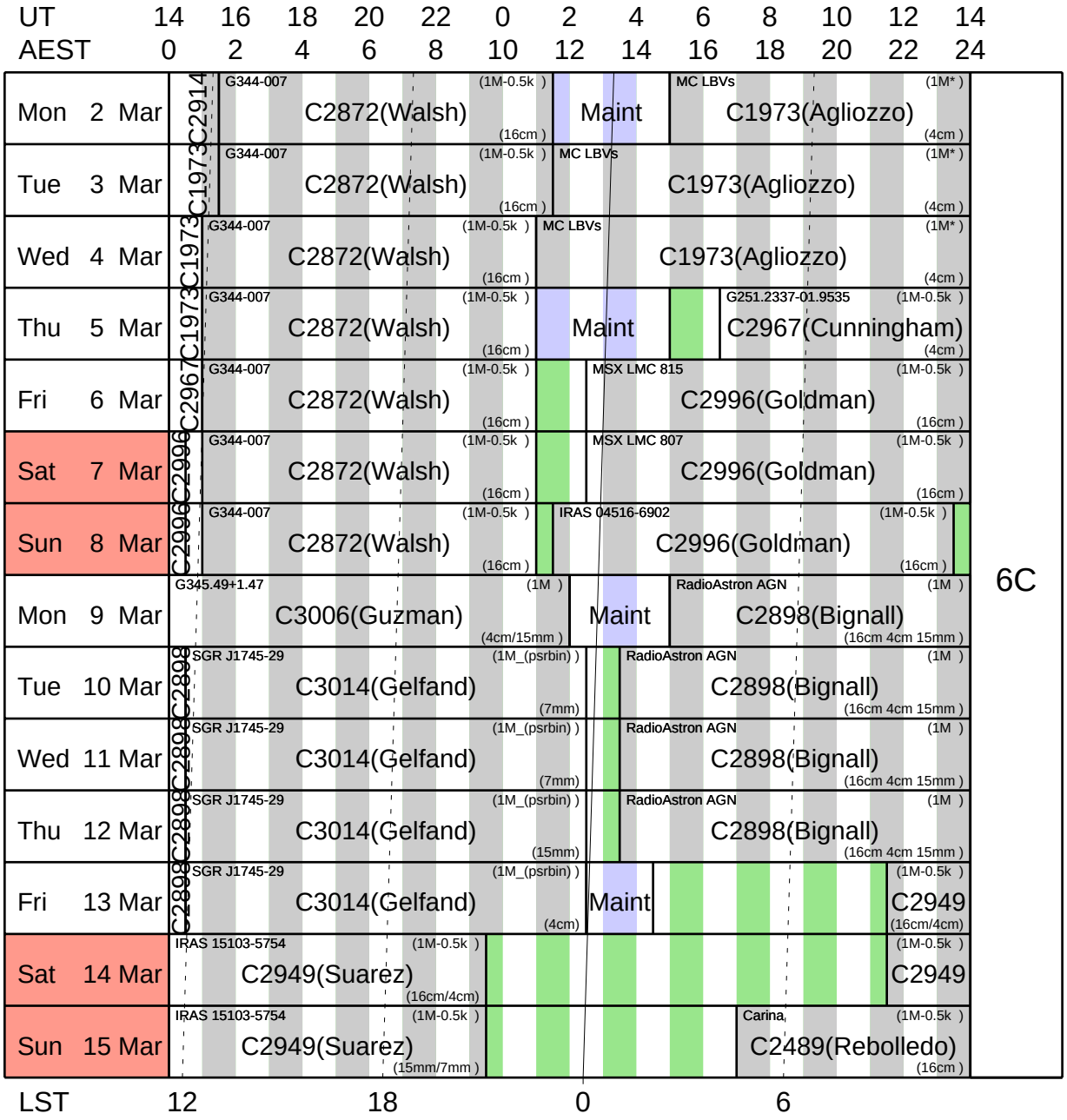

	Stations	Baselines (m)
6C	W0 W10 W113 W140 W182 W392	153,413,643,1056,1577,1730,1990,2143,2633,2786,3214,3857,4270,5847,6000

Australia Telescope Compact Array

Schedule:- 16 Mar - 29 Mar

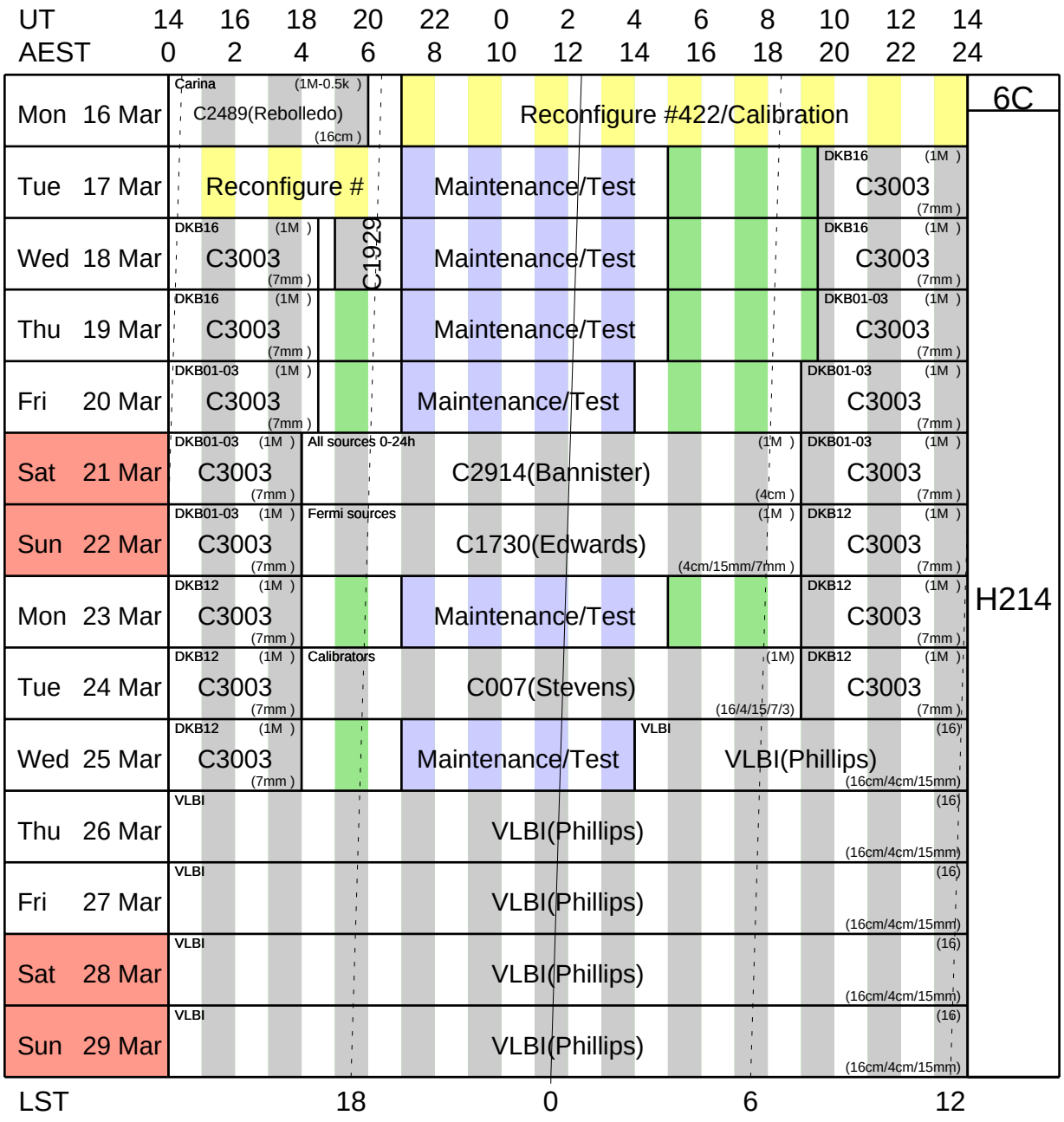

	Stations	Baselines (m)
6C	W0 W10 W113 W140 W182 W392	153,413,643,1056,1577,1730,1990,2143,2633,2786,3214,3857,4270,5847,6000
H214	W98 N5 N14 W104 W113 W392	82,92,132,138,138,144,216,230,240,247,4270,4378,4383,4408,4500

Australia Telescope Compact Array

Schedule:- 30 Mar - 12 Apr

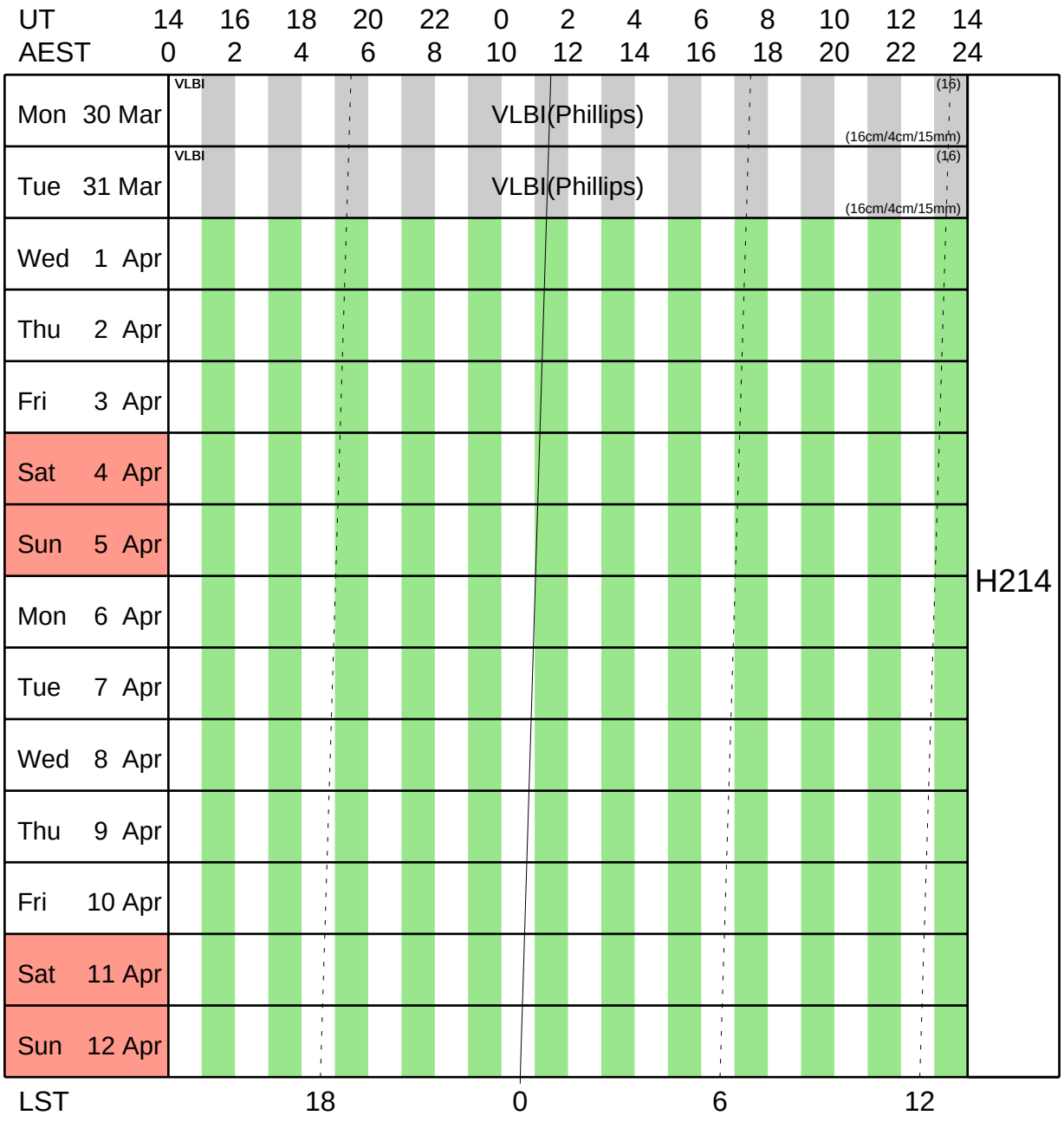

Stations	Baselines (m)
H214 W98 N5 N14 W104 W113 W392	82,92,132,138,138,144,216,230,240,247,4270,4378,4383,4408,4500