Australia Telescope Compact Array

Schedule:- 30 Sep - 13 Oct

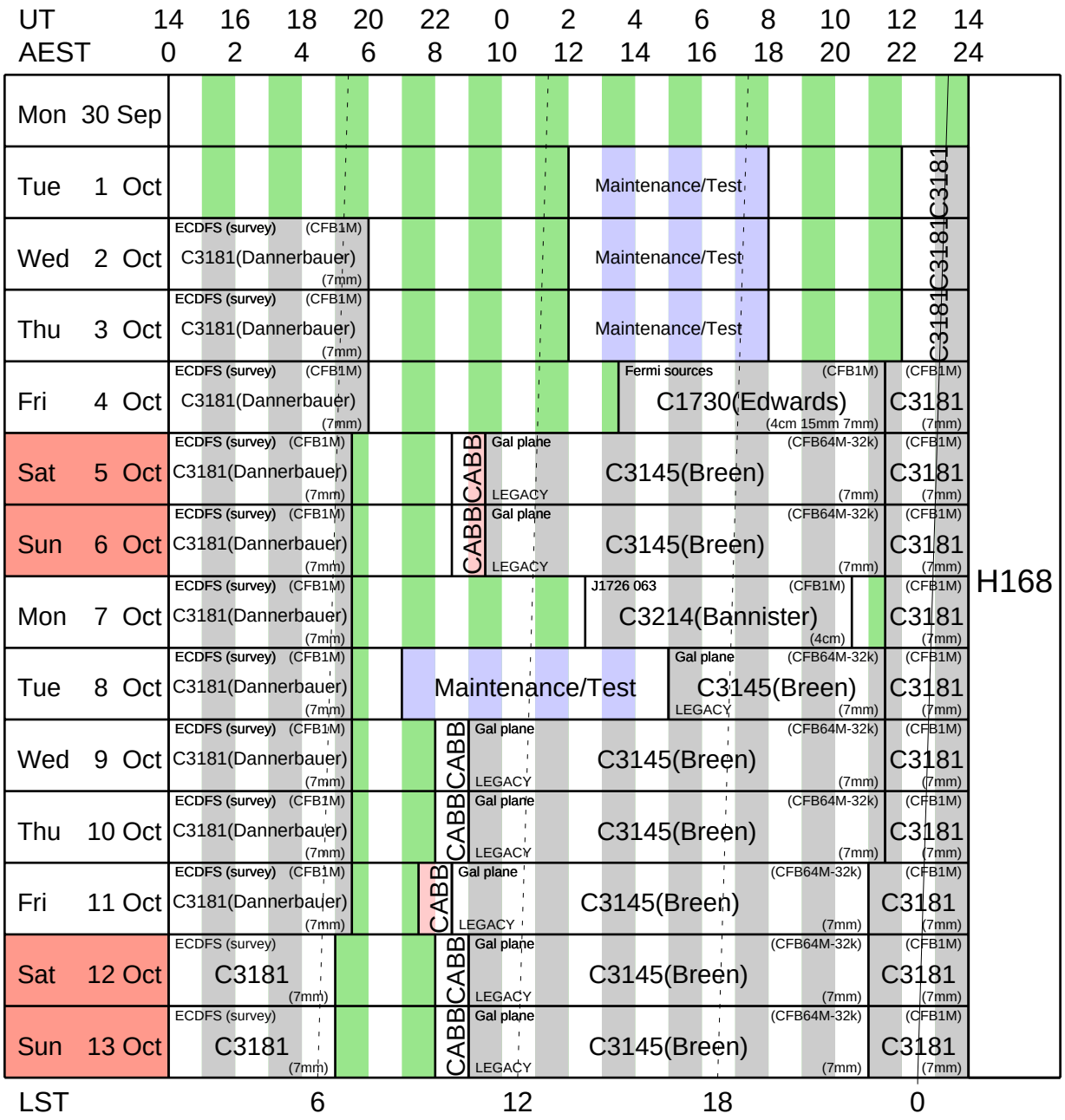

Stations	Baselines (m)
H168 W100 N11 N7 W104 W111 W392	61,61,107,111,132,141,168,171,185,192,4301,4379,4381,4408,4469

Australia Telescope Compact Array

Schedule:- 14 Oct - 27 Oct

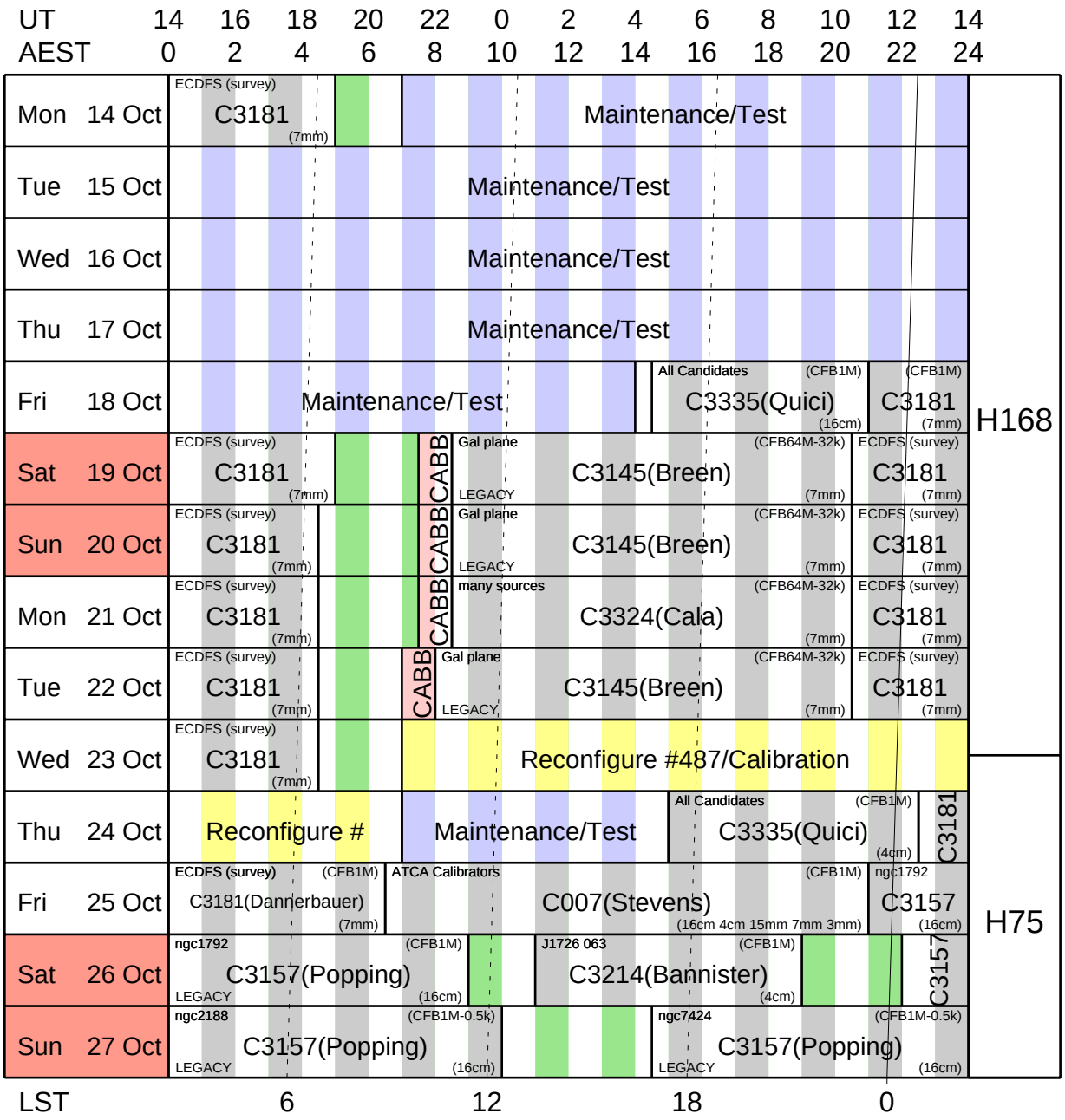

	Stations	Baselines (m)
H168	W100 N11 N7 W104 W111 W392	61,61,107,111,132,141,168,171,185,192,4301,4379,4381,4408,4469
H75	W104 N2 N5 W106 W109 W392	31,31,43,46,55,77,77,82,89,4332,4378,4378,4378,4408

Australia Telescope Compact Array

Schedule:- 28 Oct - 10 Nov

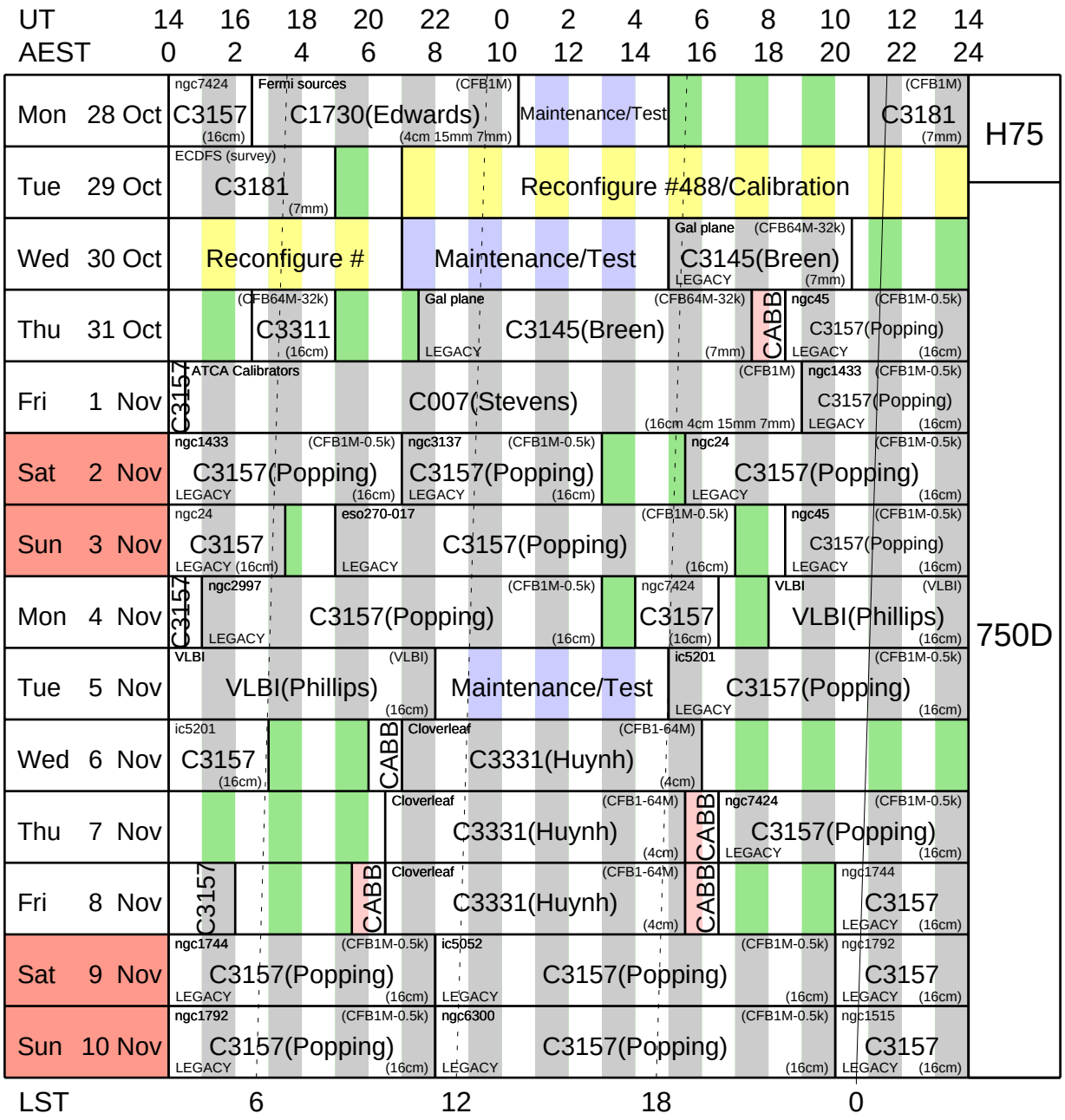

	Stations	Baselines (m)
H75	W104 N2 N5 W106 W109 W392	31,31,43,46,55,77,77,82,89,4332,4378,4378,4378,4408
750D	W100 W102 W128 W140 W147 W392	31,107,184,291,398,429,582,612,689,719,3750,3857,4041,4439,4469

Australia Telescope Compact Array

Schedule:- 11 Nov - 24 Nov

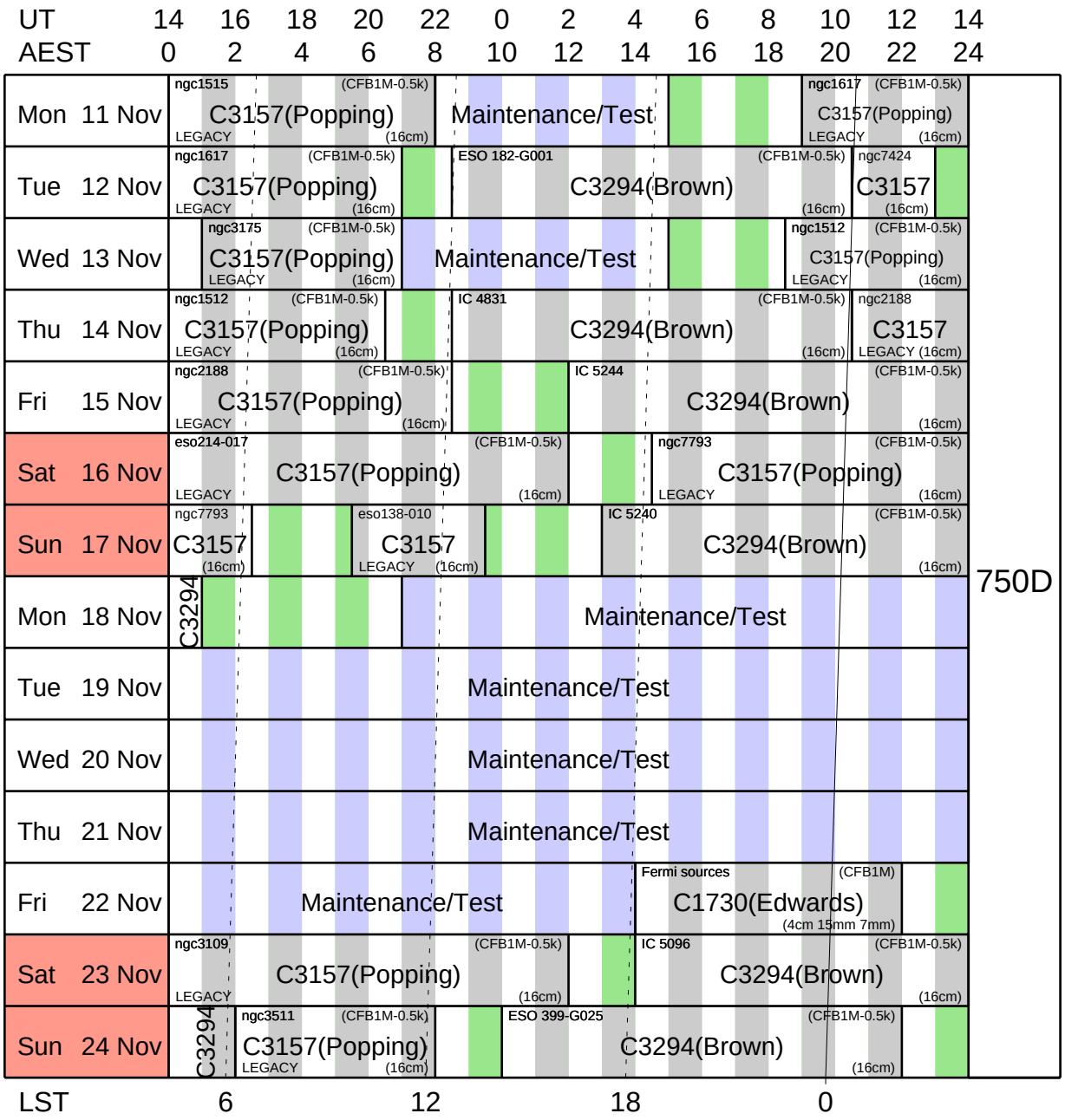

	Stations	Baselines (m)
750D	W100 W102 W128 W140 W147 W392	31,107,184,291,398,429,582,612,689,719,3750,3857,4041,4439,4469

Australia Telescope Compact Array

Schedule:- 25 Nov - 8 Dec

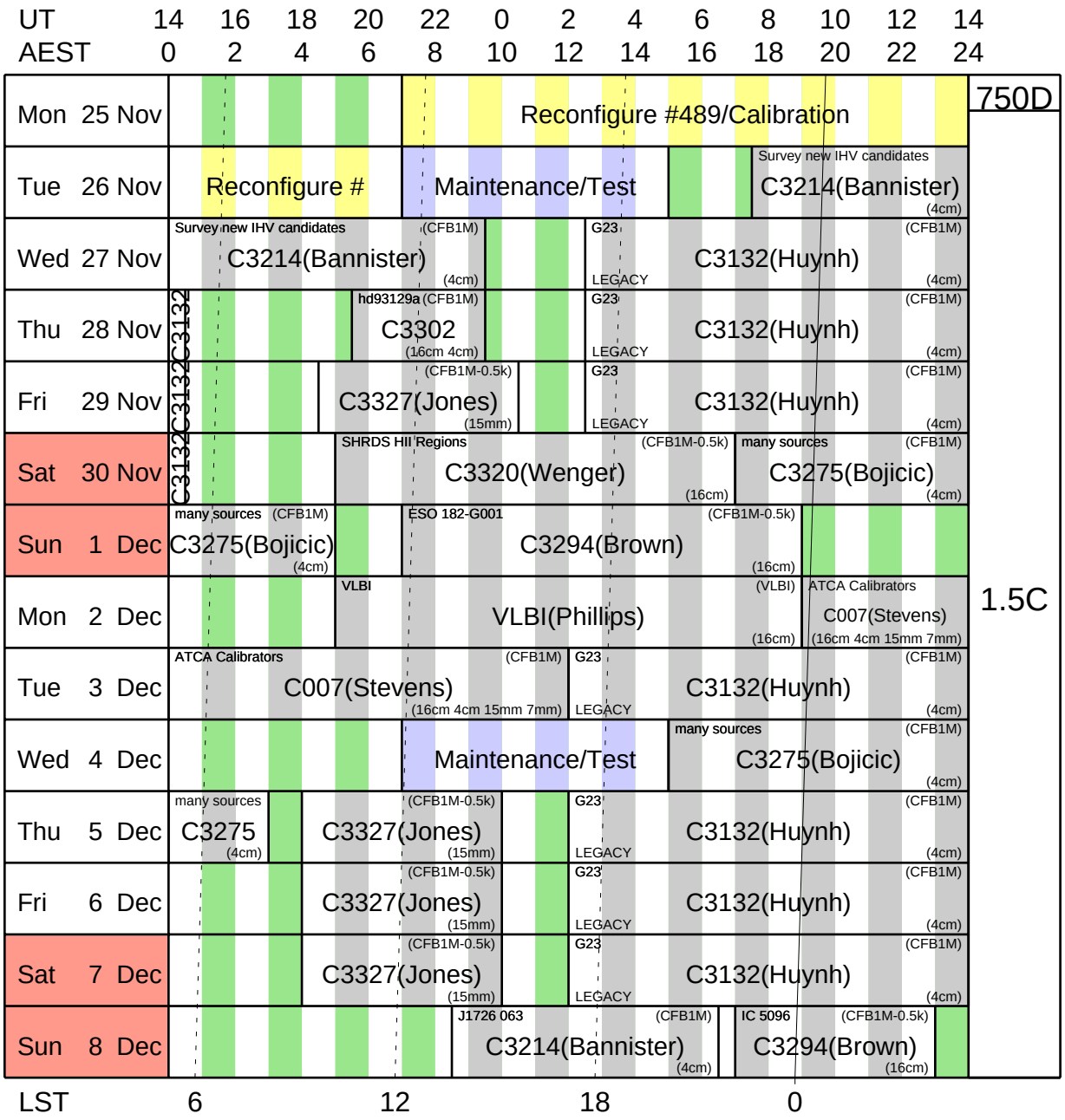

	Stations	Baselines (m)
750D	W100 W102 W128 W140 W147 W392	31,107,184,291,398,429,582,612,689,719,3750,3857,4041,4439,4469
1.5C	W98 W128 W173 W190 W195 W392	77,260,337,459,689,949,1026,1148,1408,1485,3015,3092,3352,4041,4500

Australia Telescope Compact Array

Schedule:- 9 Dec - 22 Dec

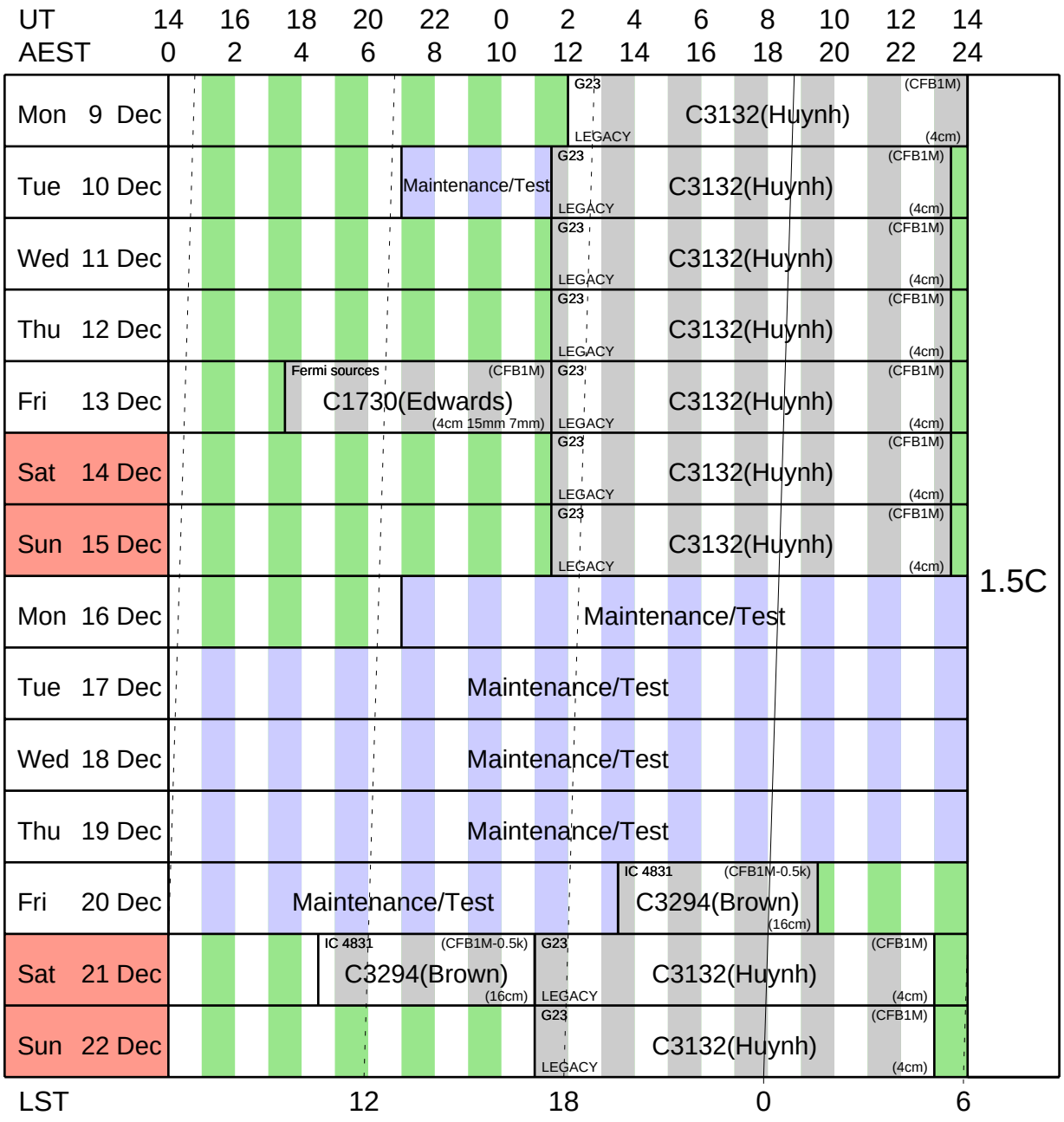

	Stations	Baselines (m)
1.5C	W98 W128 W173 W190 W195 W392	77,260,337,459,689,949,1026,1148,1408,1485,3015,3092,3352,4041,4500

Australia Telescope Compact Array

Schedule:- 23 Dec - 5 Jan

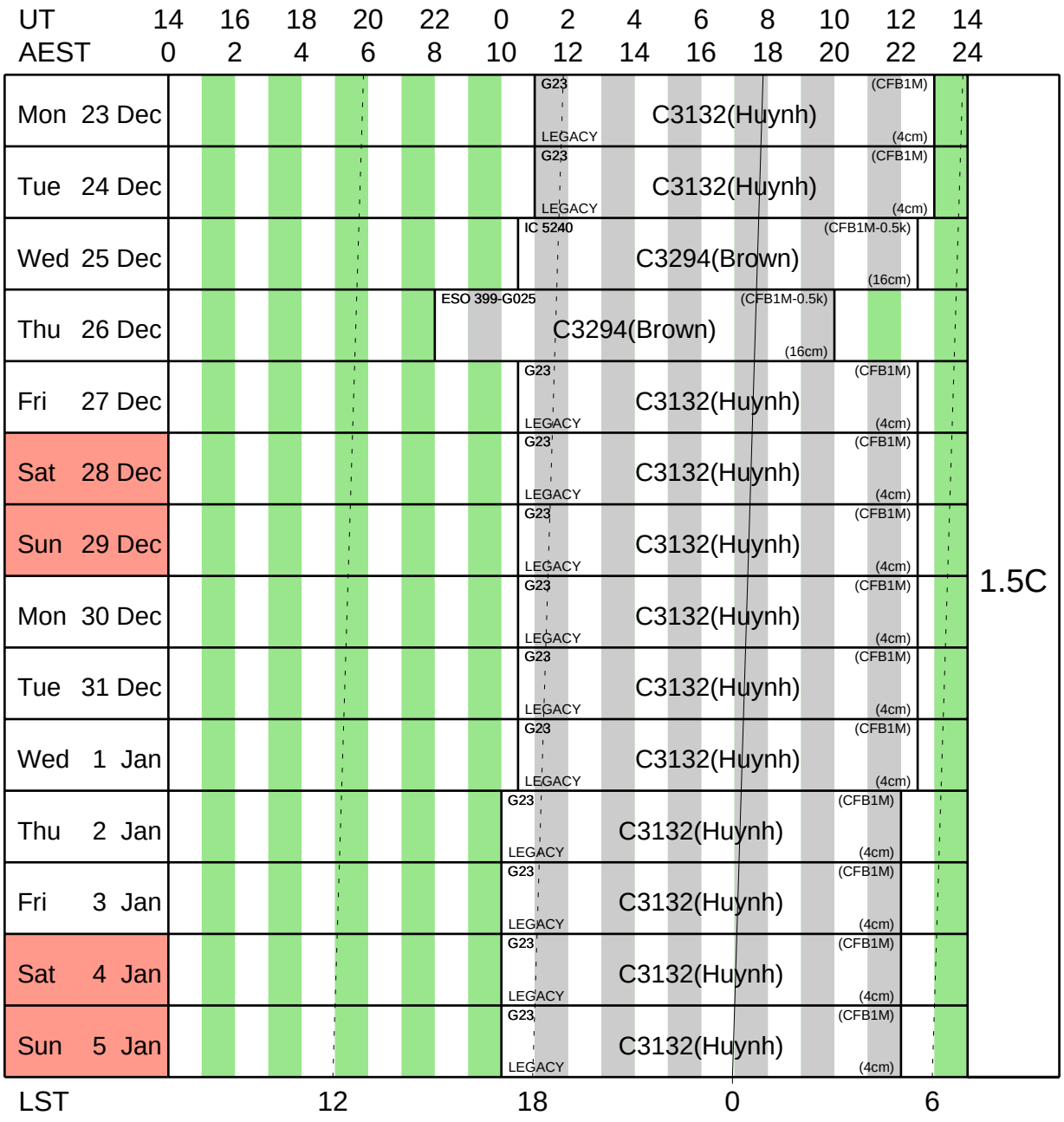

	Stations	Baselines (m)
1.5C	W98 W128 W173 W190 W195 W392	77,260,337,459,689,949,1026,1148,1408,1485,3015,3092,3352,4041,4500

Australia Telescope Compact Array

Schedule:- 6 Jan - 19 Jan

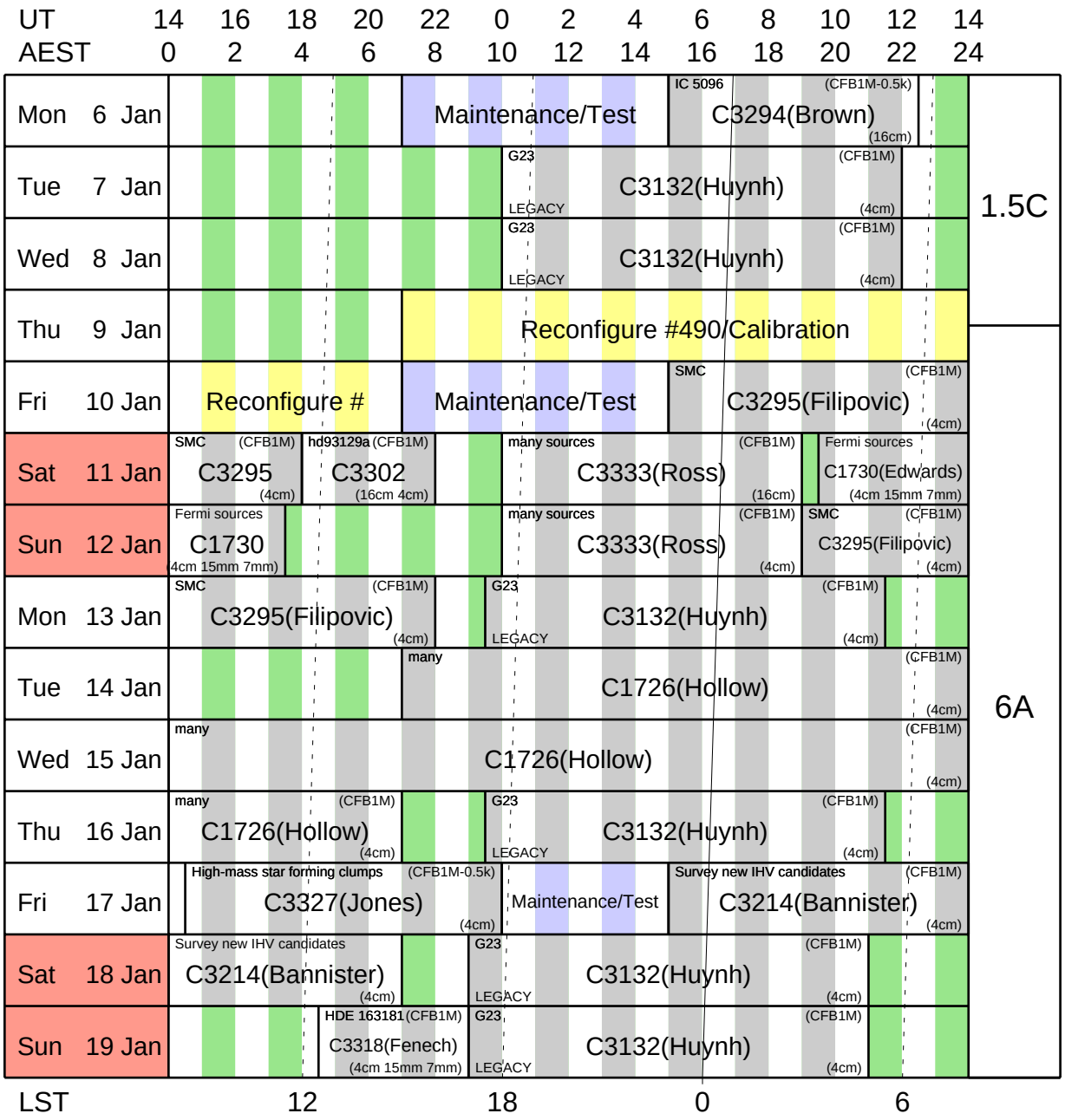

	Stations	Baselines (m)
1.5C	W98 W128 W173 W190 W195 W392	77,260,337,459,689,949,1026,1148,1408,1485,3015,3092,3352,4041,4500
6A	W4 W45 W102 W173 W195 W392	337,628,872,1087,1432,1500,1959,2296,2587,2923,3015,3352,4439,5311,5939

Australia Telescope Compact Array

Schedule:- 20 Jan - 2 Feb

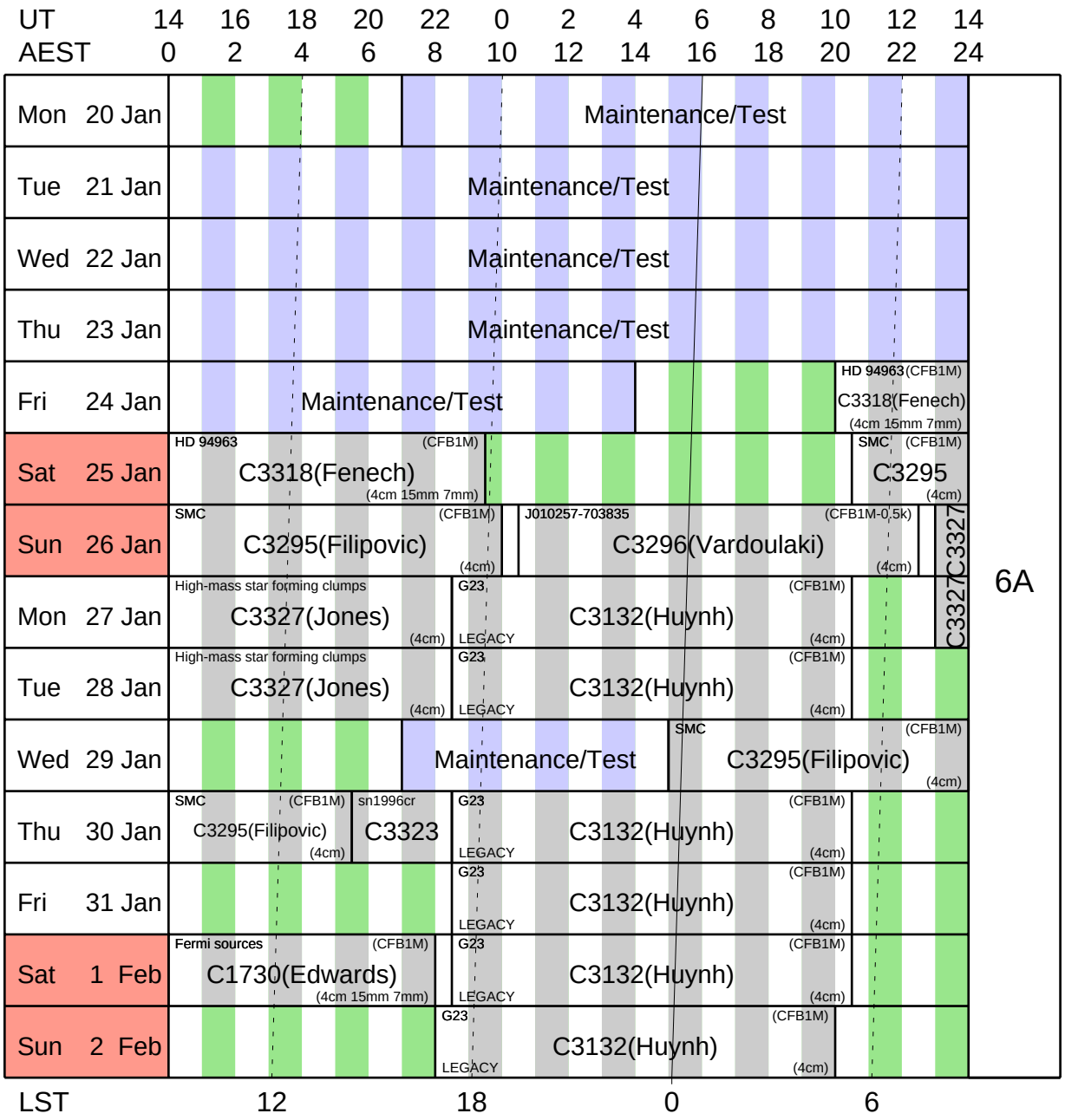

	Stations	Baselines (m)
6A	W4 W45 W102 W173 W195 W392	337,628,872,1087,1432,1500,1959,2296,2587,2923,3015,3352,4439,5311,5939

Australia Telescope Compact Array

Schedule:- 3 Feb - 16 Feb

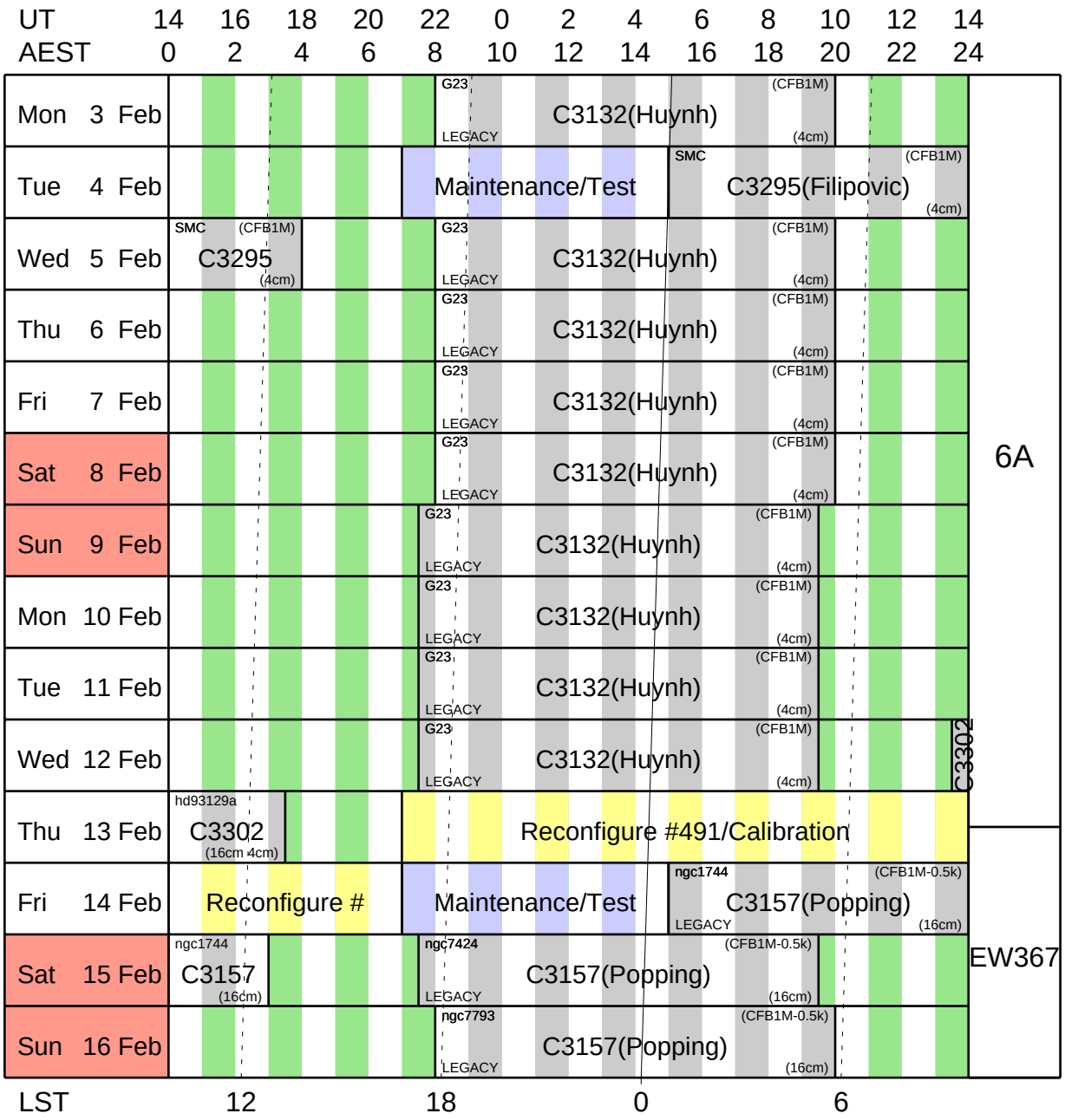

	Stations	Baselines (m)
6A	W4 W45 W102 W173 W195 W392	337,628,872,1087,1432,1500,1959,2296,2587,2923,3015,3352,4439,5311,5939
EW367	W104 W110 W113 W124 W128 W392	46,61,92,138,168,214,230,276,306,367,4041,4102,4270,4316,4408

Australia Telescope Compact Array

Schedule:- 17 Feb - 1 Mar

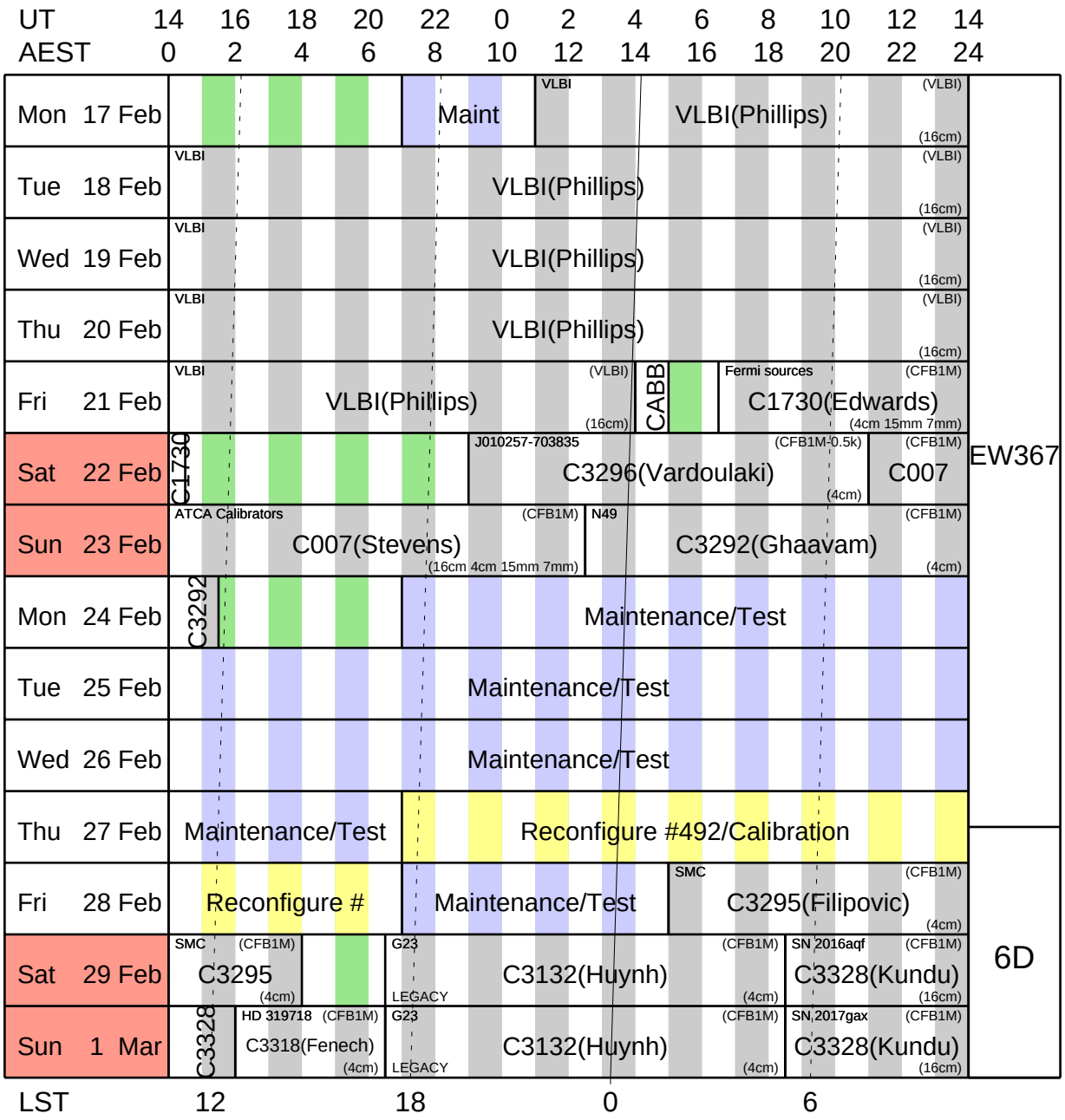

	Stations	Baselines (m)
EW367	W104 W110 W113 W124 W128 W392	46,61,92,138,168,214,230,276,306,367,4041,4102,4270,4316,4408
6D	W8 W32 W84 W168 W173 W392	77,367,796,1163,1286,1362,2082,2158,2449,2525,3352,3429,4714,5510,5878

Australia Telescope Compact Array

Schedule:- 2 Mar - 15 Mar

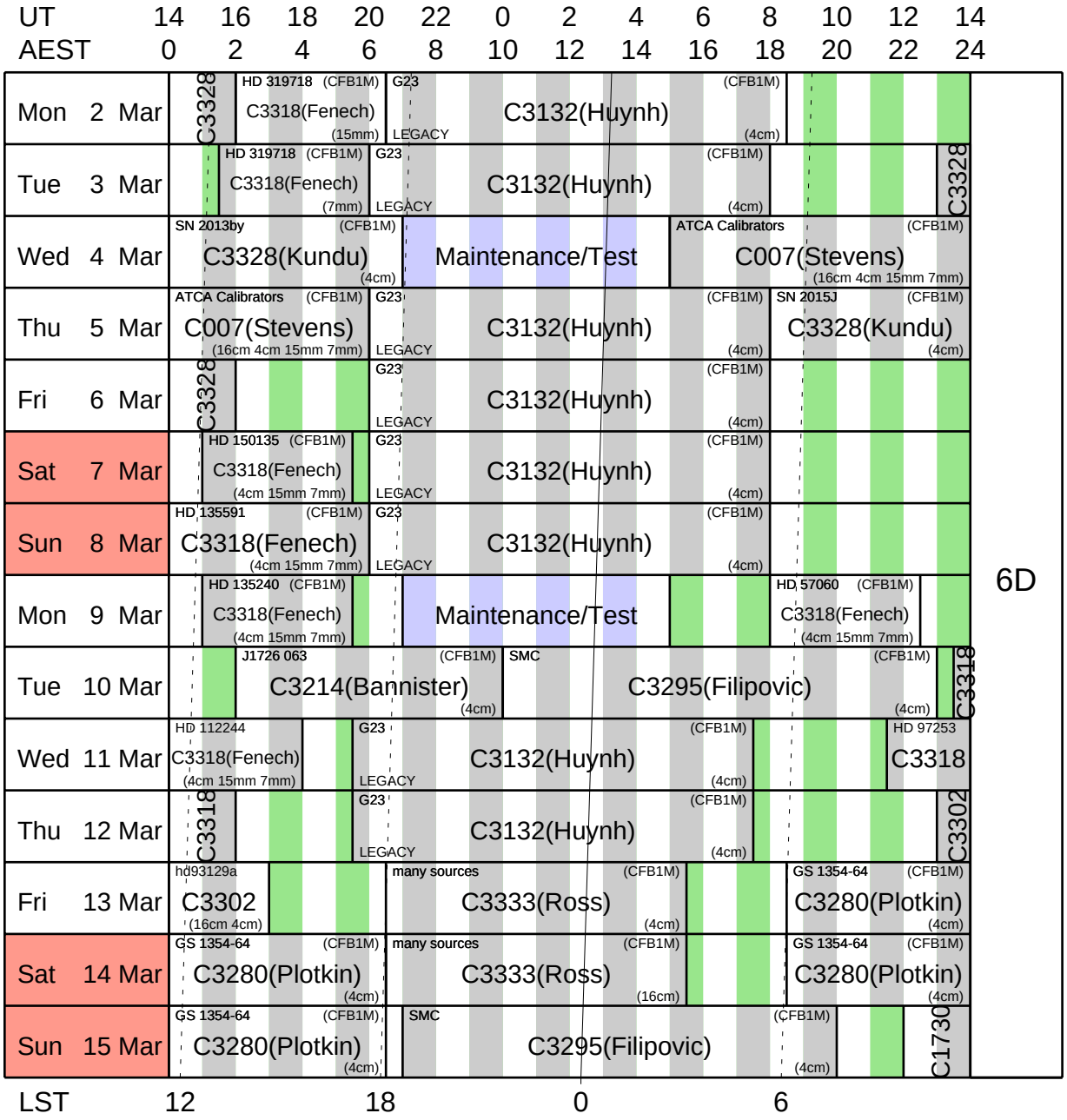

	Stations	Baselines (m)
6D	W8 W32 W84 W168 W173 W392	77,367,796,1163,1286,1362,2082,2158,2449,2525,3352,3429,4714,5510,5878

Australia Telescope Compact Array

Schedule:- 16 Mar - 29 Mar

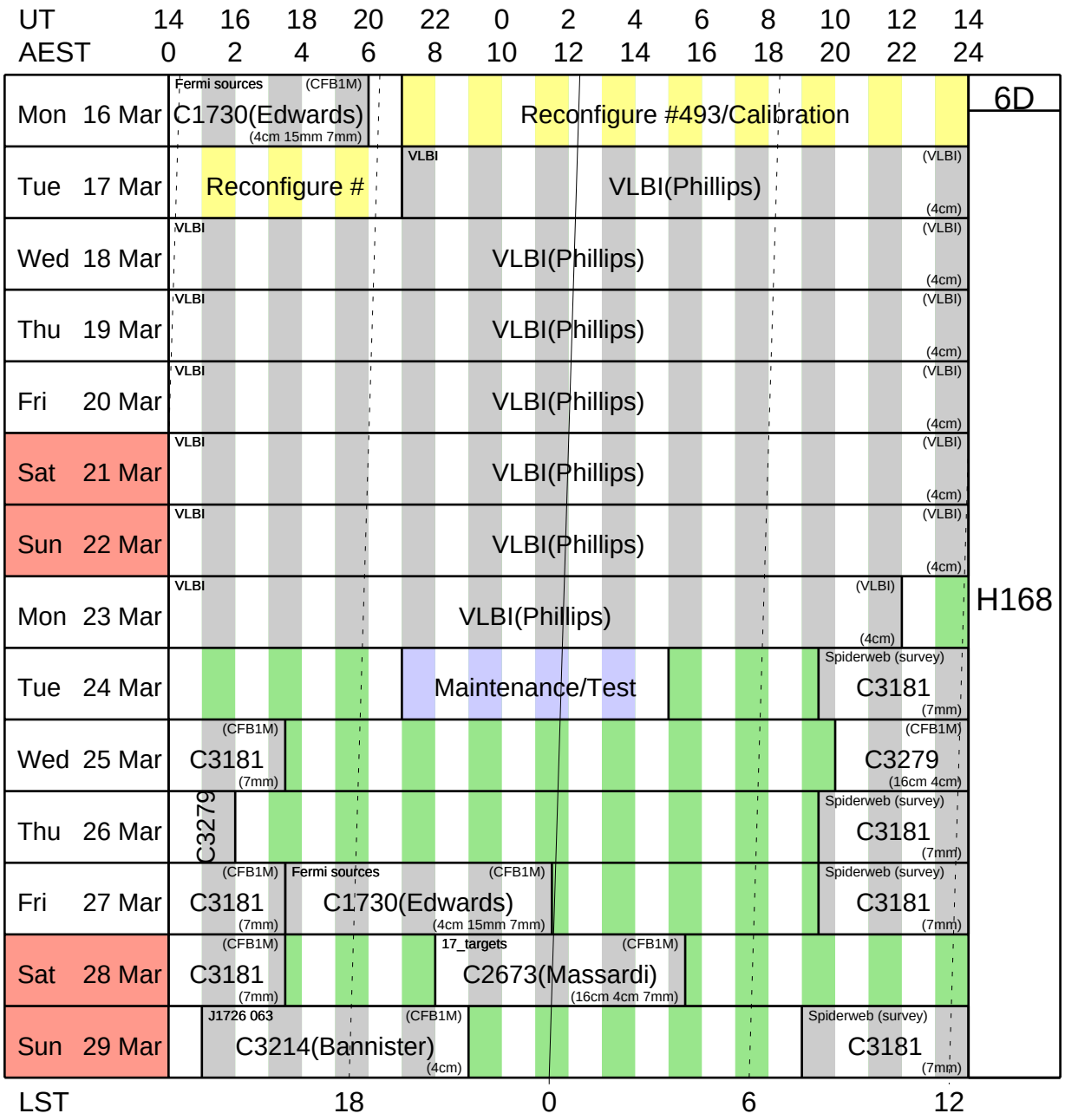

	Stations	Baselines (m)
6D	W8 W32 W84 W168 W173 W392	77,367,796,1163,1286,1362,2082,2158,2449,2525,3352,3429,4714,5510,5878
H168	W100 N11 N7 W104 W111 W392	61,61,107,111,132,141,168,171,185,192,4301,4379,4381,4408,4469

Australia Telescope Compact Array

Schedule:- 30 Mar - 12 Apr

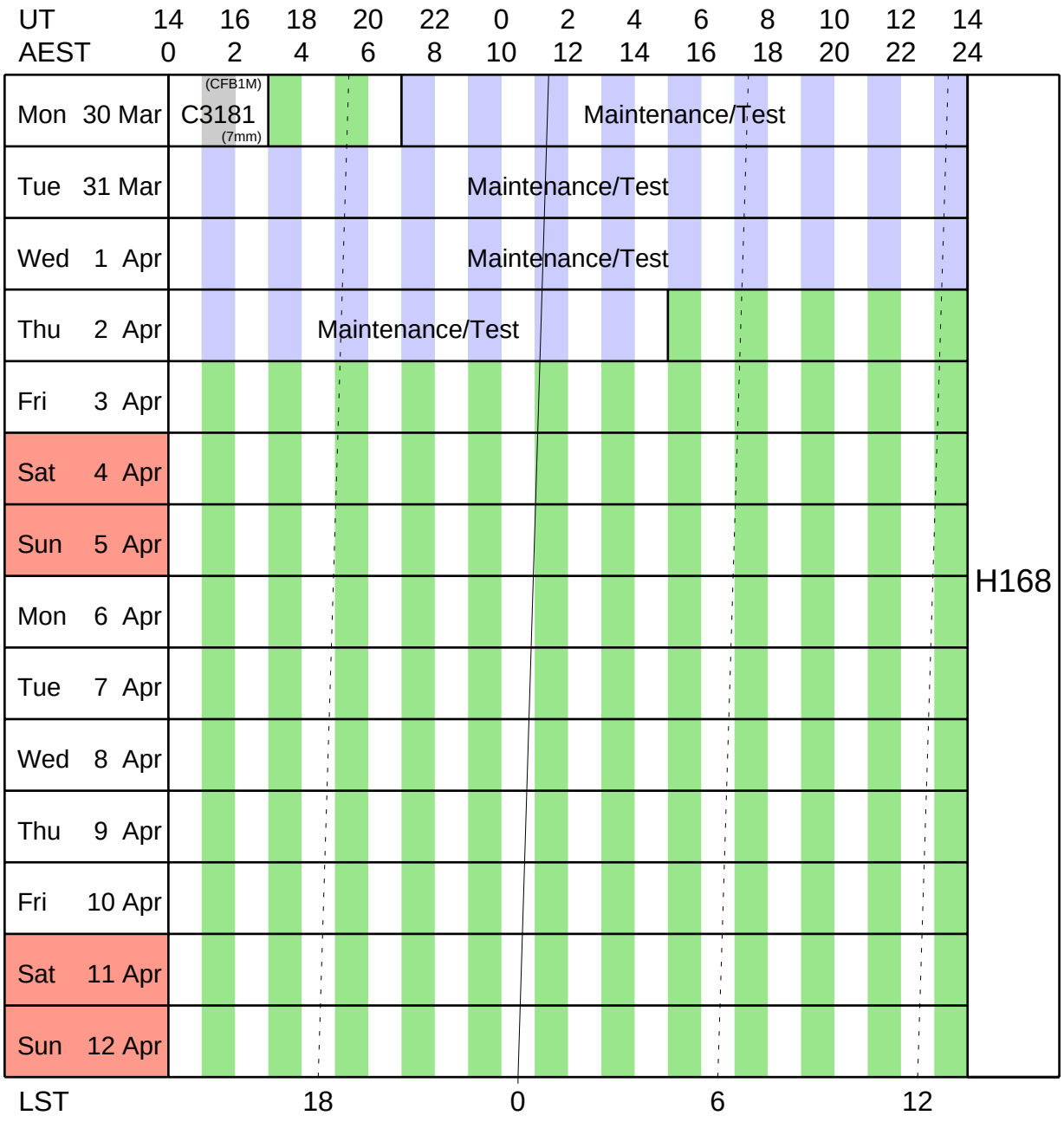

Stations	Baselines (m)
H168 W100 N11 N7 W104 W111 W392	61,61,107,111,132,141,168,171,185,192,4301,4379,4381,4408,4469